MIE 100 Final Exam Supplement

2018 (Winter)..... 1
2017 (Winter)..... 7
2016 (Winter)..... 13
2014 (Winter)..... 18
2012 (Winter)..... 22
2011 (Winter)..... 28
2010 (Winter)..... 33
2009 (Winter)..... 37
2008 (Winter)..... 39
2007 (Winter)..... 43
2006 (Winter)..... 48

Accessed by sadman@duck.com (IP 99.237.10.205)
on 04/24/2022 at 07:07:06.

University of Toronto – Engineering

MIE100S – Applied Mechanics: Dynamics

Final Examination - April 2018

Exam length: 150 minutes

1. Block B and Block C are on a hill sloped at 20 degrees as shown in the diagram. The blocks are linked by a rope in tension that passes around a pulley. The pulley has zero mass, and the center of the pulley is attached to a wall. There is friction between the two blocks, and between the ground and block B; the coefficients of friction between all flat surfaces are $\mu_s = 0.3$ and $\mu_k = 0.2$. The mass of block C is 10 kg, and the mass of block B is 8 kg.

   A force $P = 50\ \hat{\imath}$ Newtons is applied to block C as shown. Block C has a velocity of $8\ \hat{\imath}$ m/s at the instant shown in the diagram.

Accessed by sadman@duck.com (IP 99.237.10.205)
on 04/24/2022 at 07:27:06.

12 Draw separate free-body diagrams of block B and block C, showing clearly the direction in which each of the forces acts. What is the acceleration of block C at the instant shown in the diagram?

(Make sure your work is clearly laid out, neat, and easy to understand)

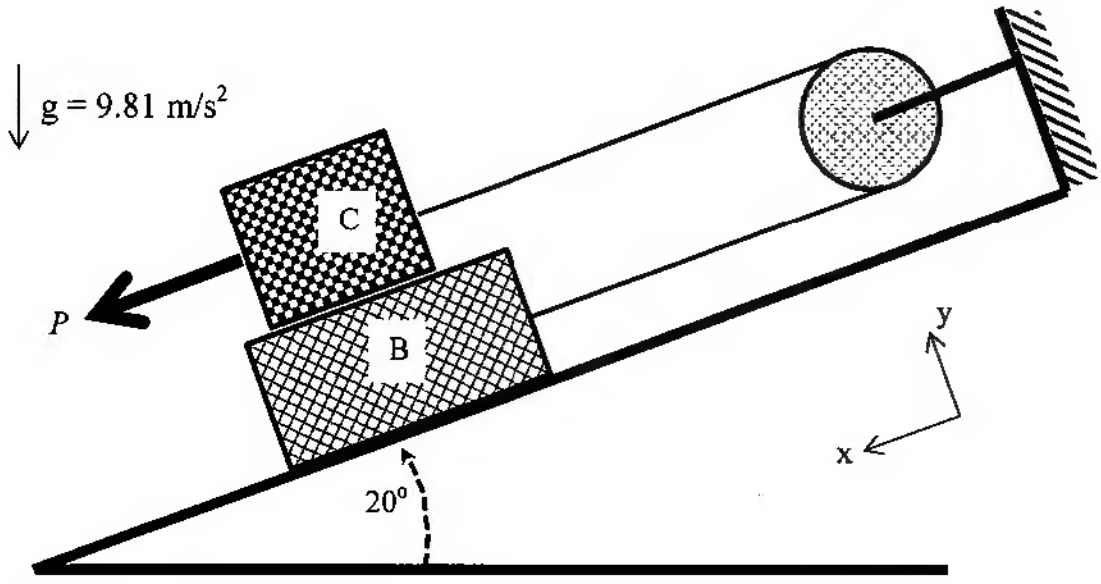

2. A particle P is travelling in a spiral path as shown. At the instant shown in the diagram, the particle's speed is increasing at a constant rate of 2 m/s^2, and its distance from the origin "O" is increasing at a constant rate of 4 m/s. At the instant shown in the diagram, the particle's position is {x,y} = {14,0} meters, and its speed is 7 m/s.

8 Determine $\frac{d\theta}{dt}$ for the particle P at the instant shown in the diagram, where θ is the angular position of P measured with respect to the x-axis in polar coordinates.

Also determine the x-component of the particle's acceleration a_x at the instant shown in the diagram.

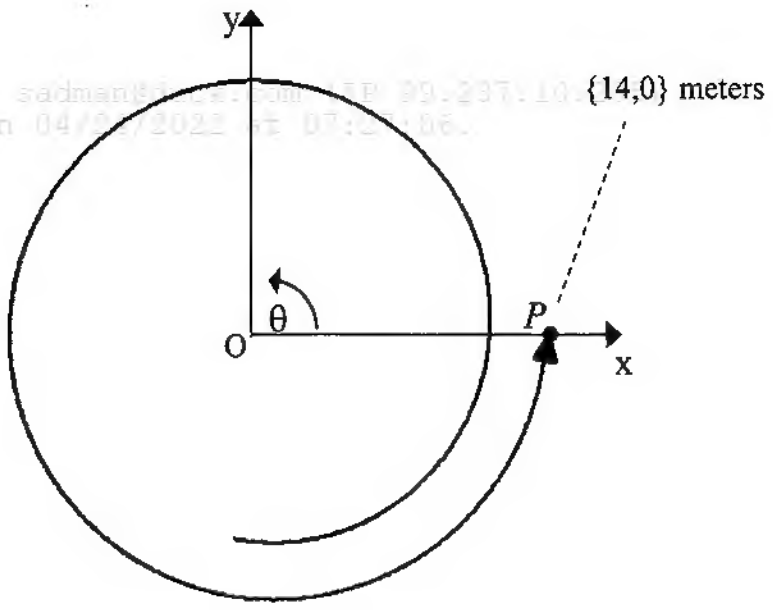

3. At the instant shown in the attached diagram, the bar AB is rotating in the positive direction with an angular velocity of $\omega_{AB} = 42.5$ radians/s.

5 (a) At the instant shown in the diagram, what is the velocity of point B? Use the co-ordinate system provided to express your answer.

10 (b) Using your answer from part (a), find both the velocity of point D and the angular velocity of bar BD at the instant shown in the diagram. Use the co-ordinate system provided to express your answers.

5 (c) Using your answers from part (a) and (b), find the acceleration of point B at the instant shown in the diagram if the speed of B is also increasing by $8 m/s^2$. Use the co-ordinate system provided to express your answer. (5 marks)

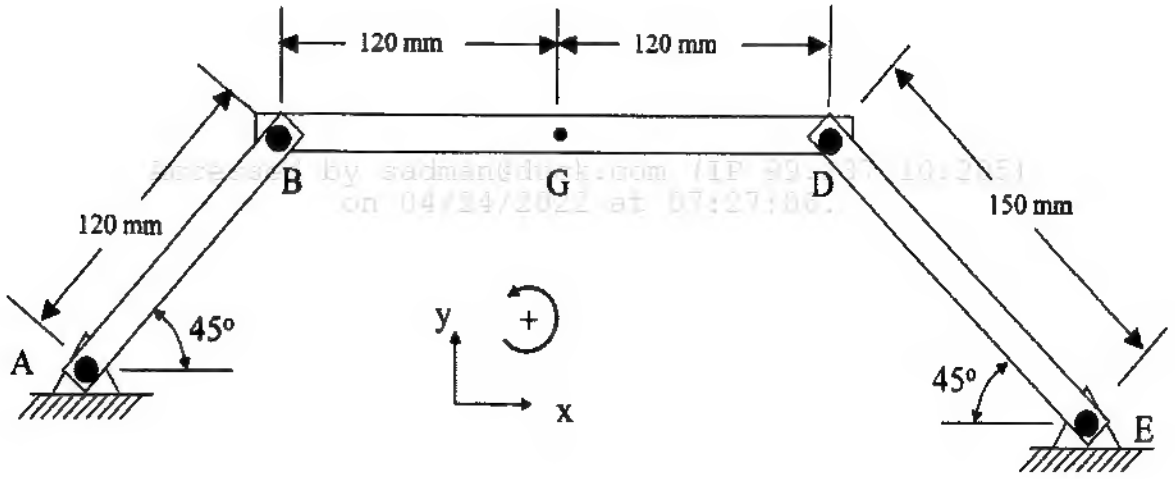

4. A slender rod of mass m = 1.3 kg and length L = 2.0 m is falling straight down from Position 1, as shown in the diagram (dotted lines). A rope with negligible mass is attached to the fixed point at A on the ceiling, and tied to the end of the rod at B. The rope is initially not in tension. The rope is suddenly in tension when the rod reaches Position 2, and the rope is hanging straight down. The rope stays in tension afterwards, but is allowed to swing.

2 (a) Draw the free body diagram of the rod immediately after the rope is in tension.

8 (b) If $\vec{v}_G = -3\hat{j}$ m/s just *before* the rope is in tension, what is the rod's angular velocity, ω, immediately *after* the rope is in tension?

6 (c) If $\vec{v}_G = -2.5\hat{j}$ m/s immediately *after* the rope is in tension, what is the rod's total kinetic energy at that moment?

4 (d) If the rod is initially at rest in Position (1), and h = 1.5 m and the rope has a length of 2m, what is velocity of point C, $\vec{v}_C$, just before it reaches Position (2)?

Accessed by sadman@duck.com (IP 93.237.10.205)
on 04/24/2022 at 07:27:06.

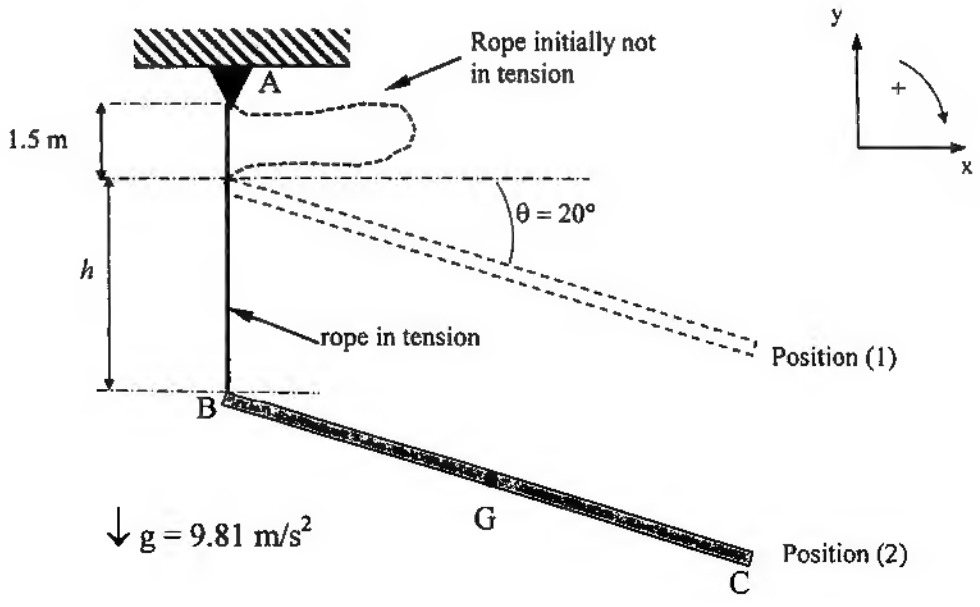

5. The wheel C has a mass = 200 kg, and the bar AB has a mass = 100 kg. One end of the bar AB is connected by a pin to the center of the wheel. The other end of the bar is leaning against a vertical wall and can slide on the wall without friction. Bar AB is 10 meters long, and the radius of wheel C is 1 m. The spring stiffness $k = 200$ N/m. One end of the spring is attached to the ceiling, and the other end is attached to a rope that is wound around a pulley and then wound around wheel C as shown in the diagram. The relaxed length of the spring is 2m. Coefficients of friction between the wheel and ground are $\mu_s = 0.4$, and $\mu_k = 0.3$. The system is initially at rest as shown in the diagram, with the spring length equal to 3m.

2	a) Draw a free body diagram of bar AB and a separate diagram for wheel C at the instant shown in the diagram.
6	b) The system is then released from rest at the position shown in the diagram. Find θ if both the bar AB and the wheel C remain stationary after the system is released.
12	c) If $\theta = 30^\circ$, find α_{AB} and α_C after the system is released from rest.

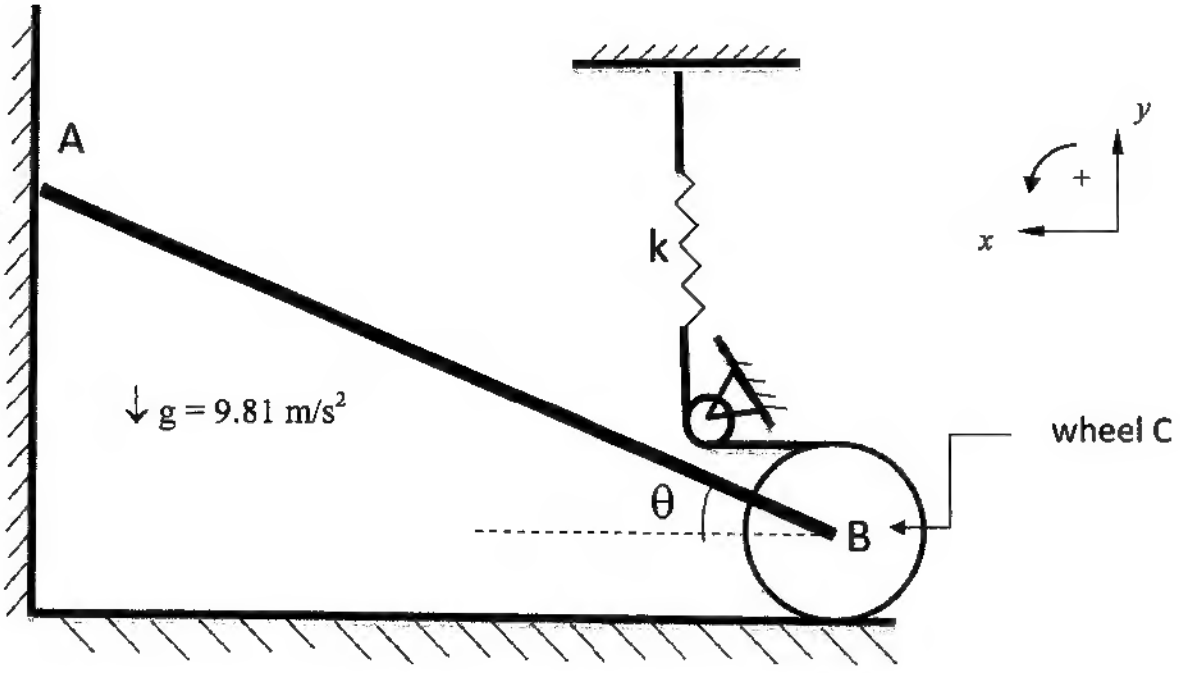

6. The mass moves only in the vertical direction. Ignore any rotation of the mass. Assume that the rope wound around the pulley remains in tension at all times. At time t=0, the mass is lifted a small distance from its equilibrium position, and then released.

$m = 15$ kg $k_1 = 100$ N/m $k_2 = 35$ N/m $C = 40 \frac{N}{m/s}$

6 (a) Find the period τ_d for damped, unforced vibrations of this system.

2 (b) How long will it take for the vibration amplitude to diminish to 3% of its initial value?

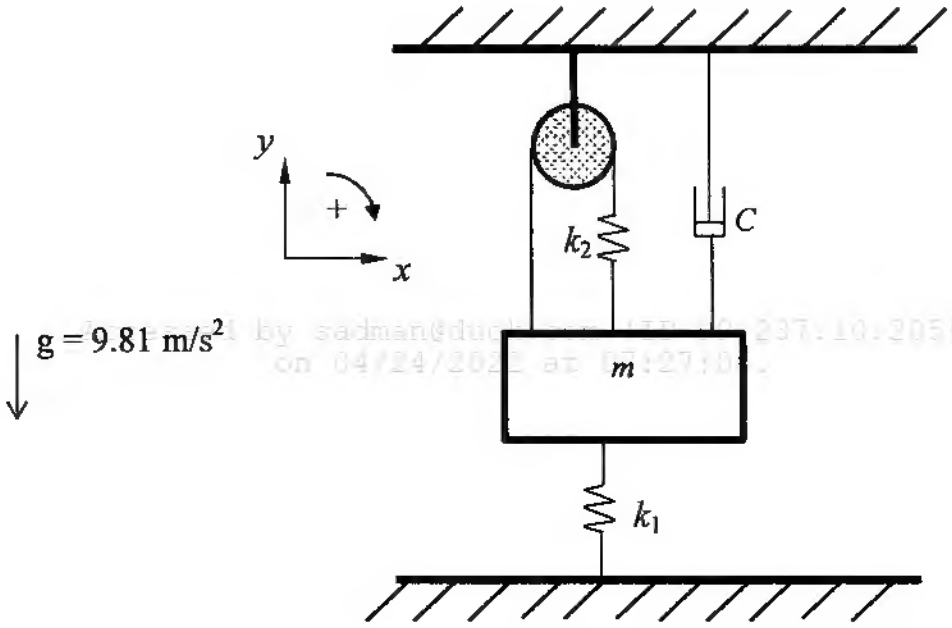

7. A uniform thin rod AB of mass 10 kg and length 4.4 meters is pinned at point C. The rod is in equilibrium in the horizontal position as shown. Spring $k_1 = 120$ N/m, and $k_2 = 180$ N/m.

6 (a) Determine the natural frequency of vibration ω_n for very low-amplitude oscillations.

6 (b) A moment $M = 4 \sin(\omega_o t)$ Newton-meters is then applied to make the rod oscillate with a very small amplitude about point C. Determine the steady-state vertical amplitude of oscillation of point B, if $\omega_o = 5$ s^{-1}.

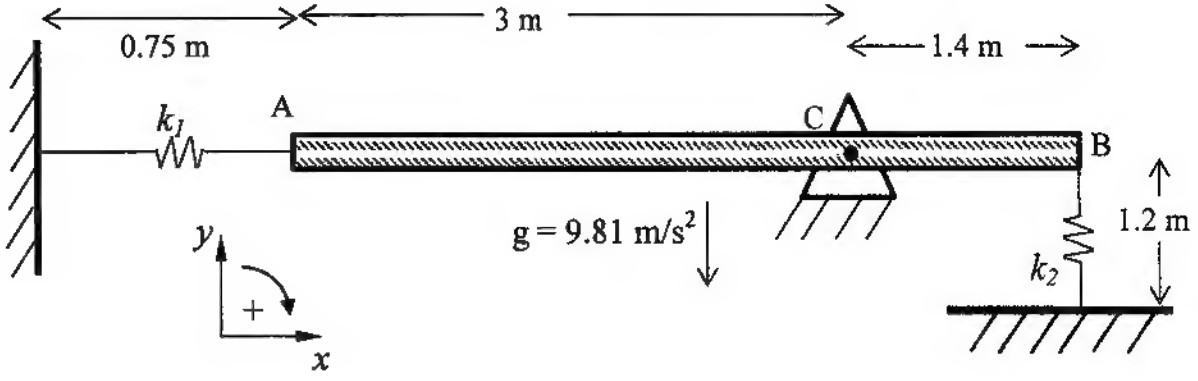

University of Toronto – Engineering

MIE100S – Applied Mechanics: Dynamics
Final Examination - April 2017
Exam length: 150 minutes

1. A wheel of radius R = 0.4 meters rolls to the right on the ground without slipping. At time t=0, the angular velocity of the wheel is $\omega = 3$ radians/second. The angular acceleration of the wheel is a function of the angular velocity, and is given by $\alpha = 4\omega$. (All variables are in SI units).

   A thin bar BD of length 1.8 meters is pinned at one end to the edge of the wheel; the other end of the bar drags along the ground. At time t=0, point D is at the position shown in the diagram, point M is at the top of the wheel.

   [6] (a) Determine the acceleration of point M at time t=0. Express your final answer in *normal-tangential* coordinates.

   [8] (b) Find the angular velocity ω of the *bar* at time t=0.

   [6] (c) What will be the angular velocity ω of the *wheel* when it has rotated 180 degrees from the position shown? (Hint: $\omega\, d\omega = \alpha\, d\theta$)

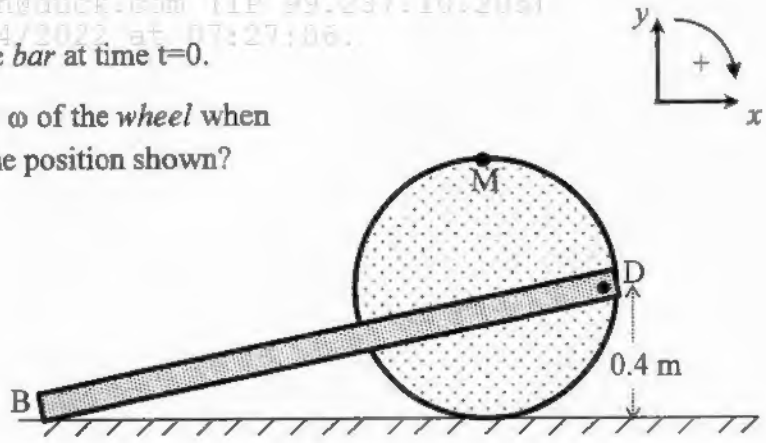

2. A uniform flat disk "A" of mass $m_A = 3.5$ kg hits a stationary ring "B" of mass $m_B = 0.8$ kg in a *perfectly elastic collision.* Both rigid bodies have zero angular velocity just before and after the collision. The coefficients of friction between the ground and rigid bodies are: $\mu_s = 0.3$ and $\mu_k = 0.25$. If $(\overrightarrow{v_A})_G = 4.0\,\hat{\imath}$ m/s before the collision, determine the velocity of the center of mass of each body immediately after the collision.

   [4]

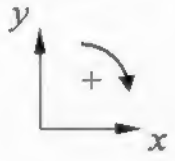

Before Impact

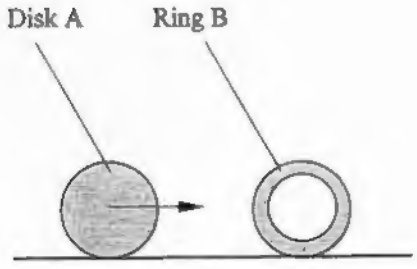

During Impact

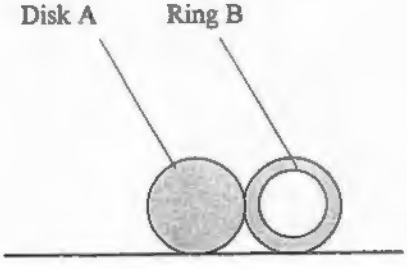

$\downarrow g = 9.81\ m/s^2$

3. A uniform flat disk "A" of mass $m_A = 3.5$ kg and radius $R = 1.3$ m is initially at rest at the top of a hill. The spring with $k = 900$ N/m has a relaxed, undeformed length $l_0 = 0.8$ m, but has been compressed to a length $l = 0.5$ m, as shown in the diagram. Note that the spring is **not** attached to the disk.

8

The spring is released, (*i.e.* it returns to its relaxed length), and this causes the disk to roll down the hill and eventually reach a flat surface. The entire surface has $\mu_s = 0.3$ and $\mu_k = 0.25$. Assume the disk rolls down the hill *without slip*. Determine the disk's angular velocity ω and velocity of the centre of mass G, $(\vec{v_A})_G$, when it reaches the bottom of the hill.

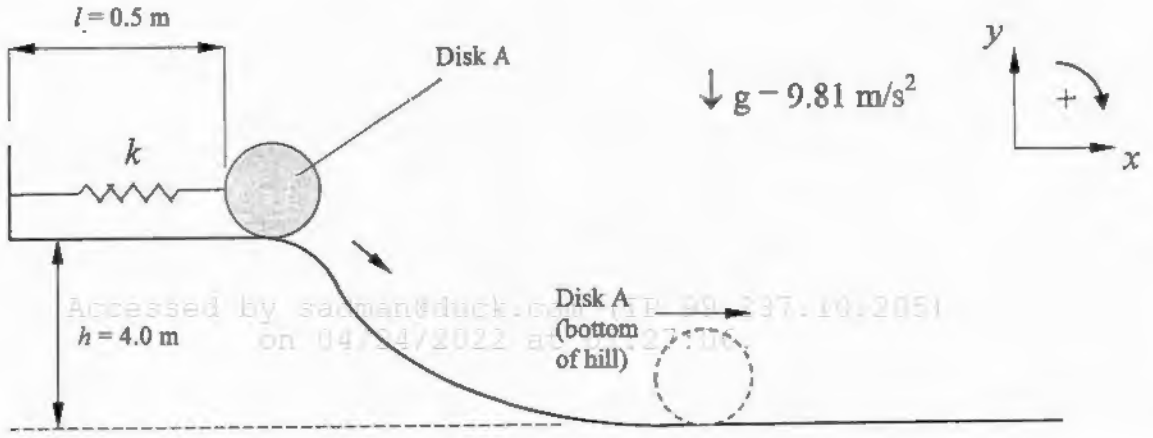

Accessed by sadman@duck.c... on 04/24/2022 at ...

4. At time t=0, a ring "B" is translating on the ground with $(\vec{v_B})_G = 2.4\hat{\imath}$ m/s and no angular velocity (i.e., it is *slipping* on the surface). How much time does it take for the ring to stop slipping, and begin to roll without slipping? The coefficients of friction between the ground and rigid bodies are: $\mu_s = 0.3$ and $\mu_k = 0.25$. The ring "B" has mass $m_B = 0.8$ kg, radius $R = 0.95$ m, and radius of gyration with respect to the center of mass $k_G = 0.9$ meters.

8

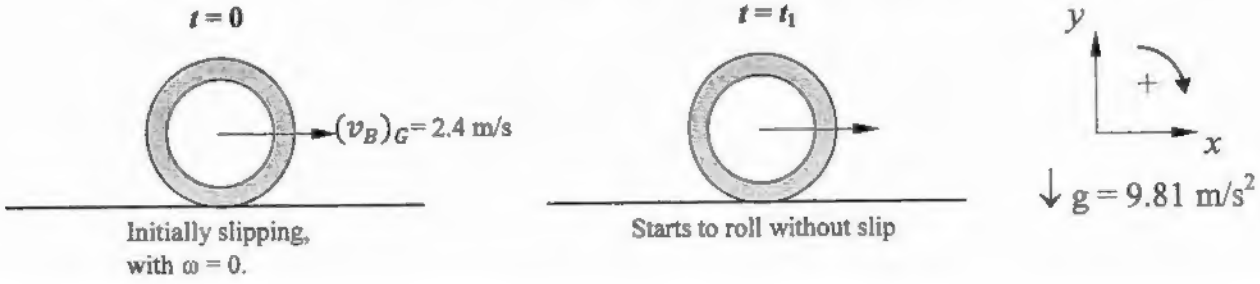

5. A uniform half-disk of mass m = 10 kg and radius R = 3 meters is on the ground and is released from rest at the position shown.

   $OG = 4R/3\pi$, where "OG" is the distance from point "O" to point "G".
   $I_G = 0.320\ mR^2$, where "G" is the center of mass of the half-disk

4 (a) Draw a free body diagram of the disk. Clearly indicate the direction of all forces acting on the disk.

8 (b) Find the minimum value of μ_s for which the half-disk starts to roll on the ground without slipping.

8 (c) Find the initial acceleration of point B if the half-disk starts to roll on the ground without slipping.

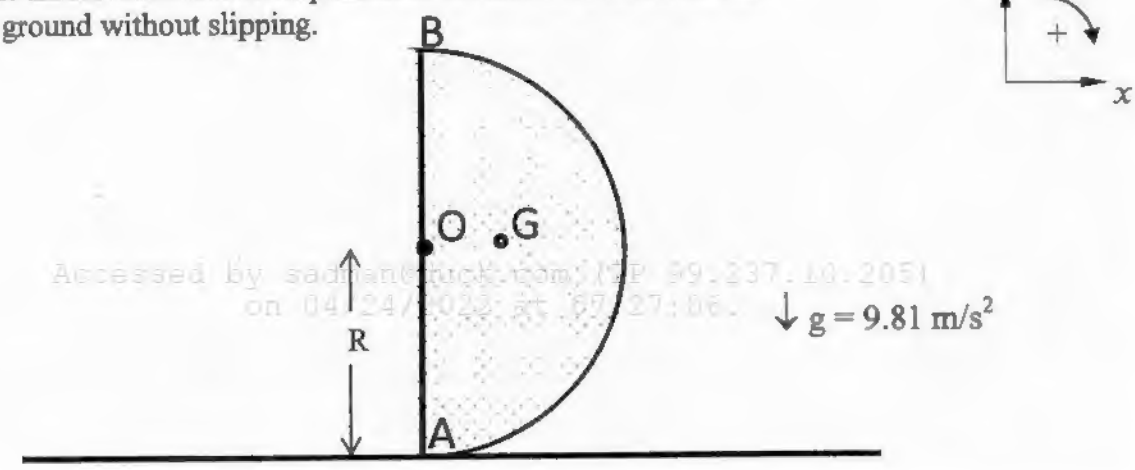

Accessed by sadman@duck.com (IP 99.237.10.205)
on 04/24/2022 at 07:27:06.

6. A bar is pinned at one end at point "O", such that it can rotate about a horizontal axis passing through "O" as shown in the diagram. A small motor at point "O" forces the bar to have a constant angular velocity of $\omega = 3$ radians/second. As the bar passes the position $\theta = 0$, a small block B of mass 0.1 kg is placed on the bar at a distance of 0.45 meters from "O".

8 The mass starts to slip on the bar when θ reaches 50 degrees. Determine the value of the coefficient of static friction μ_s between B and the bar.

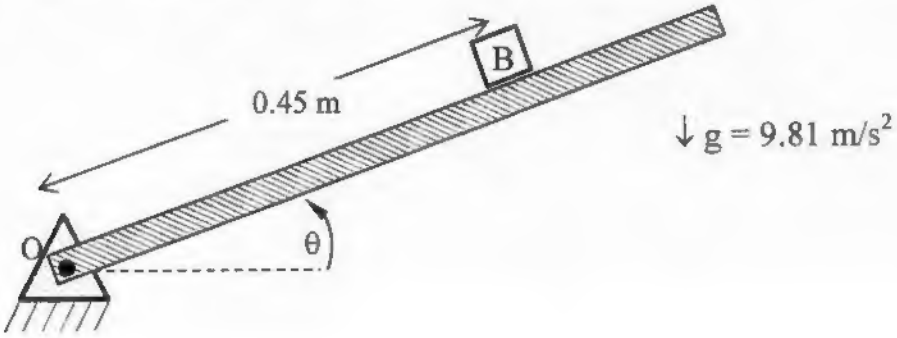

7. A bar is pinned at one end at point "O", such that it can rotate about a horizontal axis passing through "O" as shown in the diagram. A motor at point "O" controls the angular velocity of the bar. The motor forces the bar to have an angular velocity of $\omega = 3$ radians/second as the bar passes the position $\theta = 0$, and forces ω to increase at a constant rate of 1.9 radians/second^2. As the bar passes the position $\theta = 0$, a small block W of mass 0.1 kg is placed on the bar at a distance of 0.45 meters from "O". The coefficient of static friction between W and the bar is equal to $\mu_s = 0.60$.

12 Draw a free body diagram of block W when θ is equal to 35 degrees. Indicate the direction of each force on the free body diagram, and determine the magnitude of each force. (You may assume that block B is not slipping).

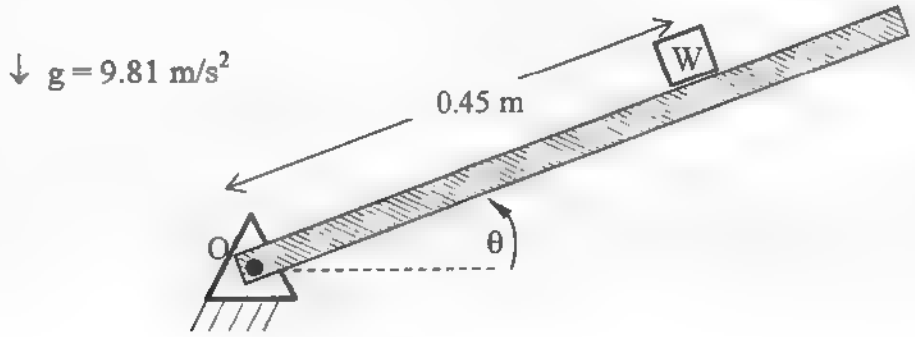

8. The system shown consists of a spring, pulley and long slender rod of length L = 5 meters and mass m = 3 kg. There is a spring with stiffness k = 250 N/m attached to the rod as shown in the diagram. The rope is being pulled by a force $F(t)$.

   Ignore the mass of the pulleys. Assume that the system is in static equilibrium when the bar is horizontal ($\theta = 0$) and $F(t) = 0$. Assume that the rope does not stretch and it does not go slack. Assume that oscillation amplitudes are very small.

[4] (a) Determine the amount of compression or extension of the spring, under static conditions when $\theta = 0$ and $F(t) = 0$.

[6] (b) If $F(t) = 10 \sin(21t)$, determine the maximum angular deflection θ_{max} of the rod under steady state conditions. All quantities are expressed in SI units

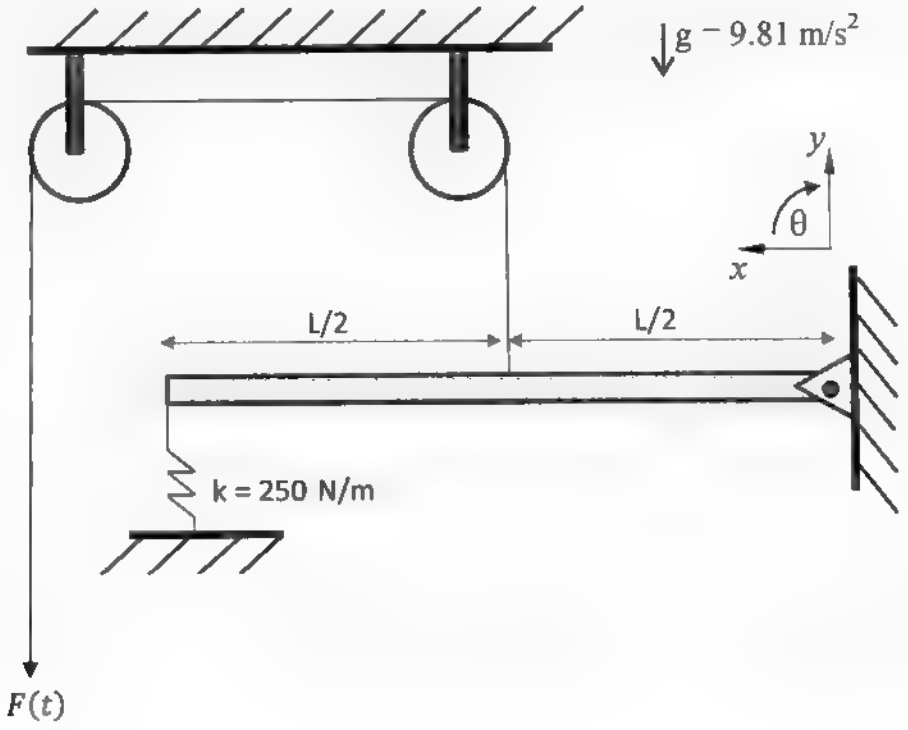

9. A pendulum consists of a small sphere B of mass 10 kg, attached to a bar in the shape of a "T" which is pinned at O and has negligible mass. The T-shaped bar is composed of a horizontal bar of length 4 meters, welded to one vertical bar of length 2 meters. The horizontal bar is connected to two ceiling supports by two identical springs of stiffness k= 155 N/m, and two dashpots (dampers) of strength c = 20 $\frac{N}{m/s}$. The springs are relaxed, and the angular orientation θ of the bar is zero when the vertical bar hangs straight down and sphere B is aligned directly under the pin at O as shown in the diagram.

[5] (a) What is the equation of motion of this system for its angular rotation θ?

[5] (b) What dashpot value, c, would make the system critically damped?

100 marks total for exam

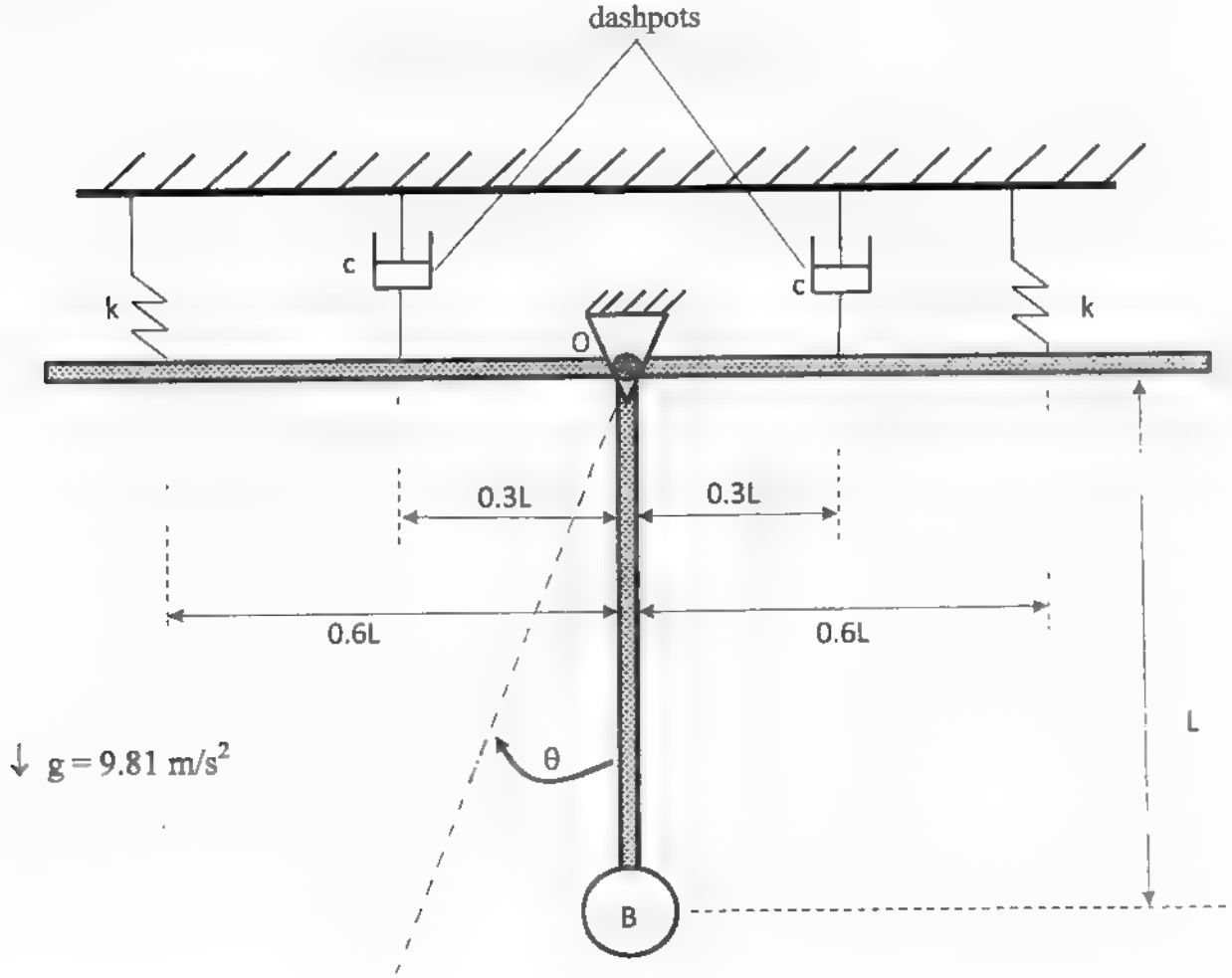

MIE100S – Applied Mechanics: Dynamics
Final Examination - Winter 2016
Exam length: 150 minutes

1. A small 20 kg block B is initially stationary on a long, sloped ramp with $\theta = 30°$. A 4 kg block D is connected with B by a cable as shown in the diagram. Suppose that blocks B and D are released from rest at the positions shown in the diagram.

8 (a) **Assume there is no friction.** Find the velocity of B when it has slid 10 meters down the surface of the ramp.

8 (b) **Assume that $\mu_k = 0.2$ and $\mu_s = 0.4$.** Will the block slide down the ramp? What will be its acceleration $\vec{a}$?

4 (c) Suppose that blocks B and D are released from rest at the positions shown in the diagram at time t=0. **Assume there is no friction.** What will be the total linear impulse applied to D in the next 0.3 seconds?

20 marks for question #1

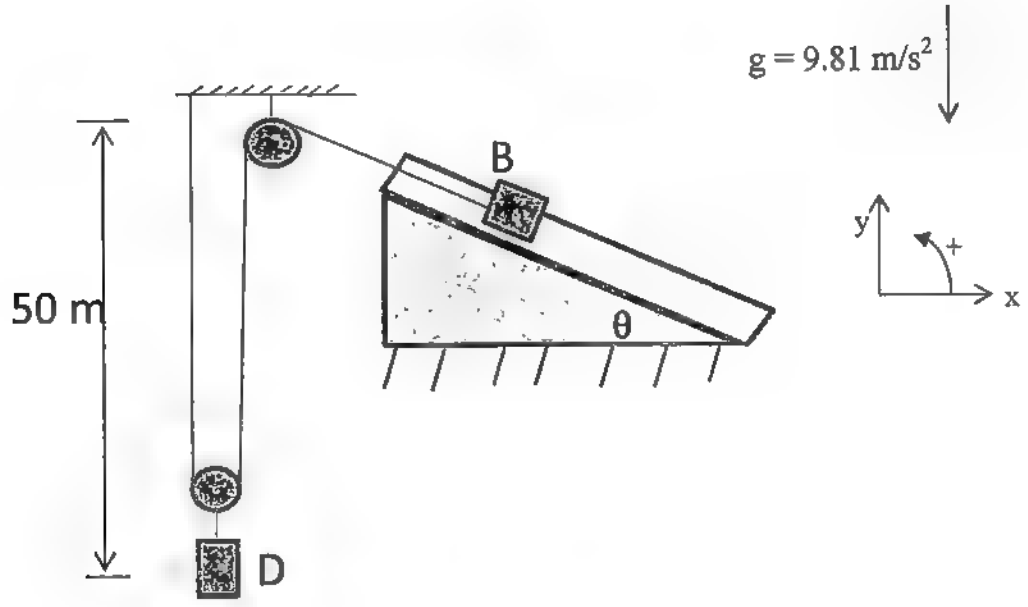

2. Answer each part of this question for the instant shown in the diagram.

5 (a) If $\omega_o = 10$ radians/s, determine the velocity of point A.

10 (b) If $\omega_o = 10$ radians/s, determine the angular velocity ω of bar AB.

5 (c) If bar CB has $\omega = 5$ radians/s and $\alpha = -3$ radians/s^2, determine the acceleration of point B.

20 marks for question #2

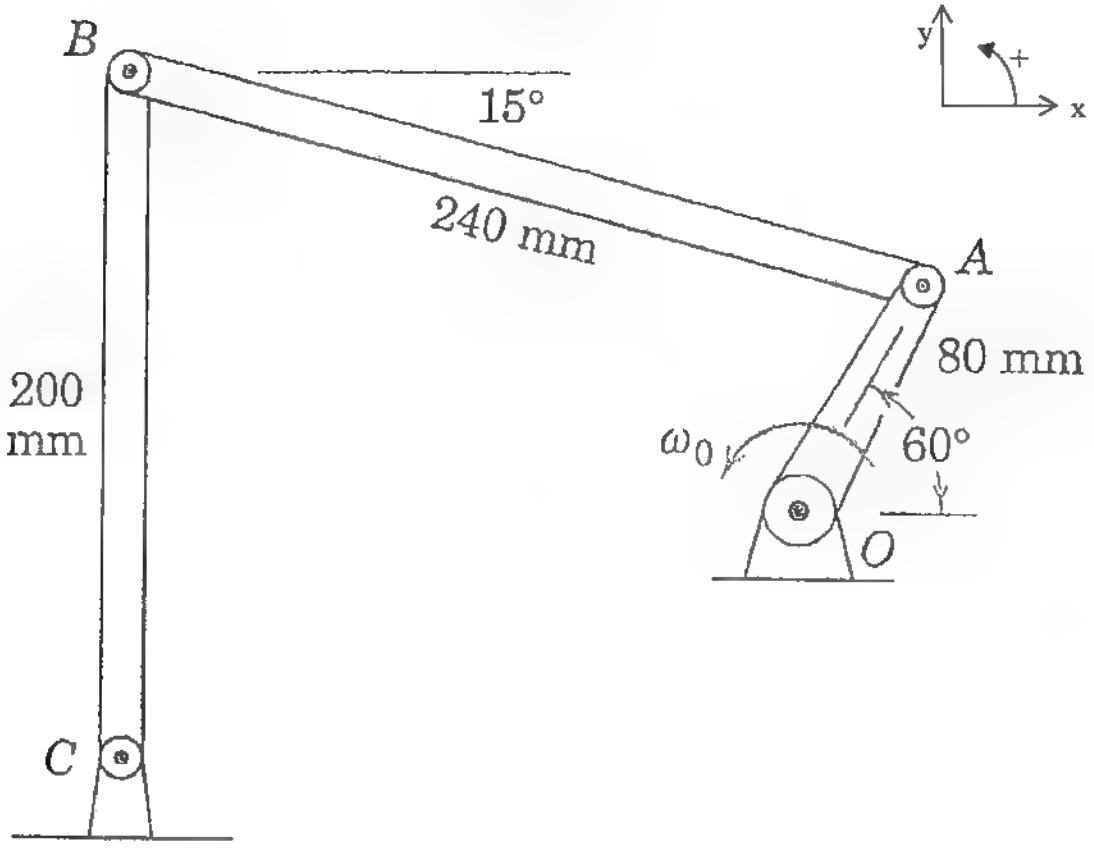

3. The long, thin uniform rod AB was released from rest at a high altitude and allowed to drop onto a frictionless floor. Its center of mass is at G. The length of the rod is 4 meters, and its mass is 21 kg. At the instant shown in the diagram, the "A" end of the rod has now contacted the floor, and is sliding to the left along the floor. At the instant shown in the diagram, the angular speed of the rod is $\omega = -3$ radians/s.

5	(a)	At the instant shown in the diagram, find the velocity of the center of the rod.
10	(b)	At the instant shown in the diagram, find the angular acceleration α of the rod.
5	(c)	At the instant before the "B" end of the rod hits the ground, what will be the location of the instantaneous center of zero velocity of the rod? Express your answer in terms of the {x,y} coordinate system shown in the diagram.

20 marks for question #3

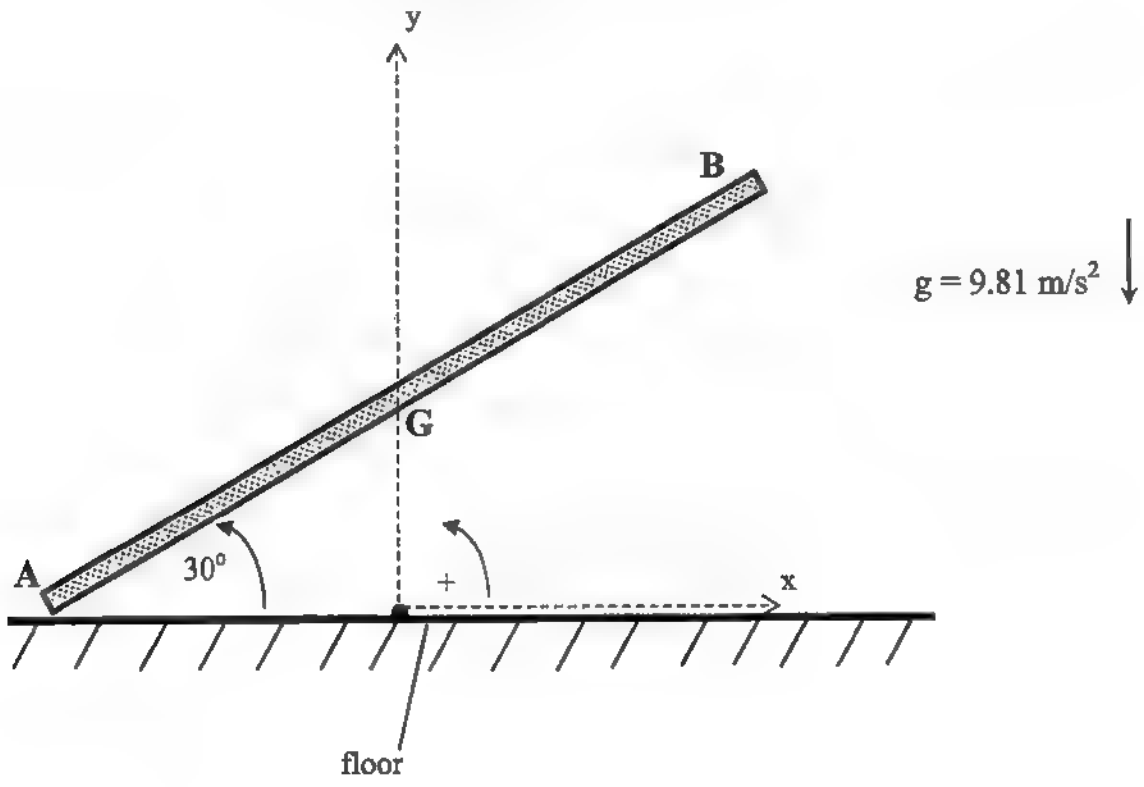

4. A 200 kg spool with inner radius r_{inner} =1.2m and outer radius r_{outer} =1.8m is released from rest on an incline of θ =42 degrees. A rope is wound around the inner hub of the spool as shown. The centre of the spool G corresponds to its centre of mass. Its radius of gyration is k_G = 1.5m. The coefficient of kinetic friction between the spool and the incline is μ_k = 0.23.

[5] a) Draw a Free Body Diagram of the spool. Clearly indicate the direction of the friction force acting on the spool.

[5] b) Assume that the spool starts to move down the incline when it is released. In what direction is the spool rotating? Indicate in a simple diagram the location of the instantaneous centre of zero velocity.

[10] c) After the center of the spool has displaced 3m, what is the speed of the centre of mass?

20 marks for question #4

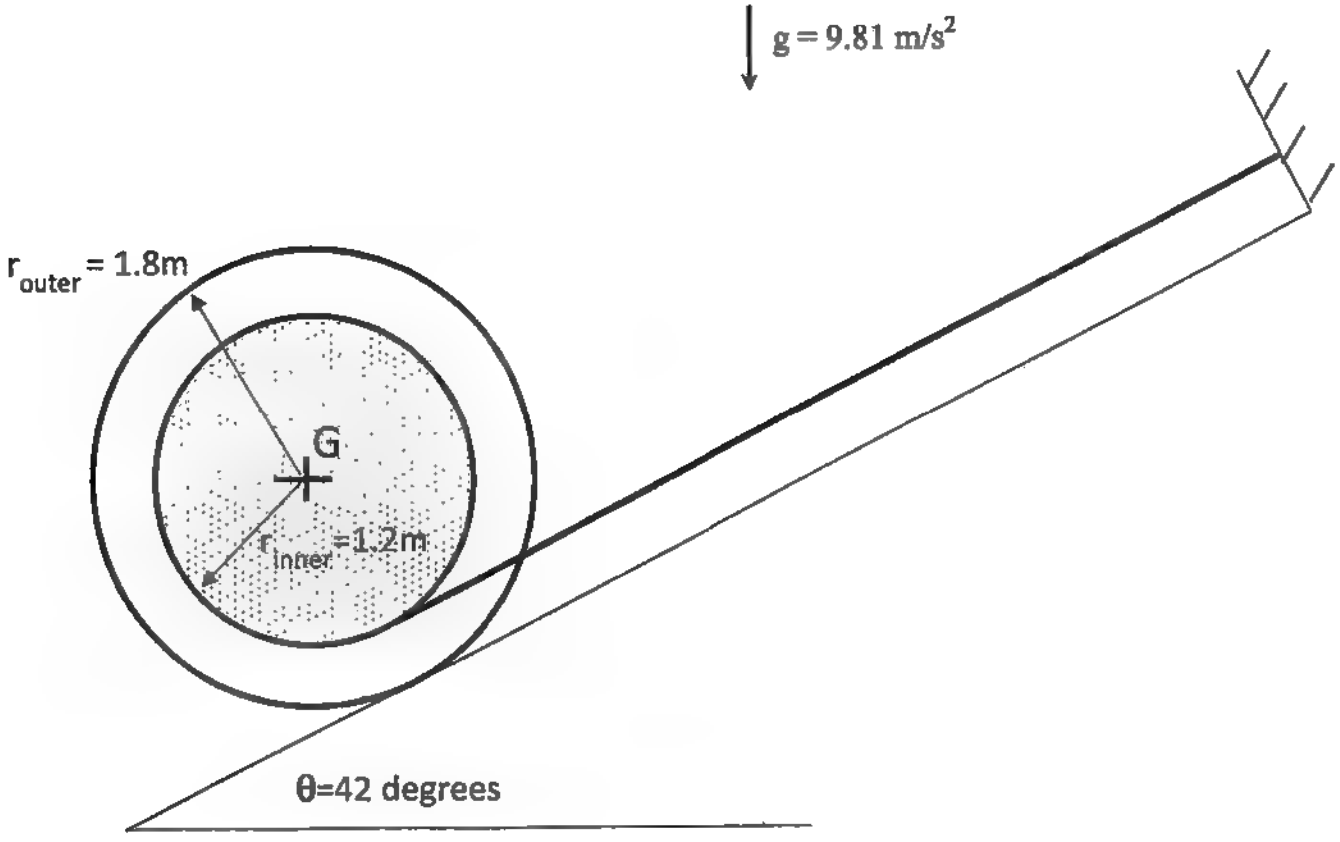

5. A slender rod AB of length L and mass m, with centre of mass located at G, is suspended from the ceiling and attached to the spring-damper system as shown in the diagram below. $k_1 = 1000$ N/m, $k_2 = 2000$ N/m, $L = 6.0$ m, $k_3 = 1500$ N/m, and $m = 40$ kg.

Assume that the rod AB oscillates only in the y-direction. Ignore any rotation.

[4] (a) If $c = 280$ N·s/m, find the natural frequency of the system, ω_n.

[10] (b) The slender rod is displaced in the y-direction from its equilibrium position located at y=0. The initial conditions at t=0 are $y(0) = 0.12$ m and $\dot{y}(0) = 0.5$ m/s.

If $c = 280$ N·s/m, find the vertical location $y(t)$ at $t = 0.2$ seconds.

[6] (c) An oscillatory force $\vec{F} = 200\ sin\ (5t)\ \hat{j}$ N is applied vertically at point G, leading to forced vibrations.

If $c = 0$ (undamped), **find the amplitude** of the steady-state vibration.

20 marks for question #5

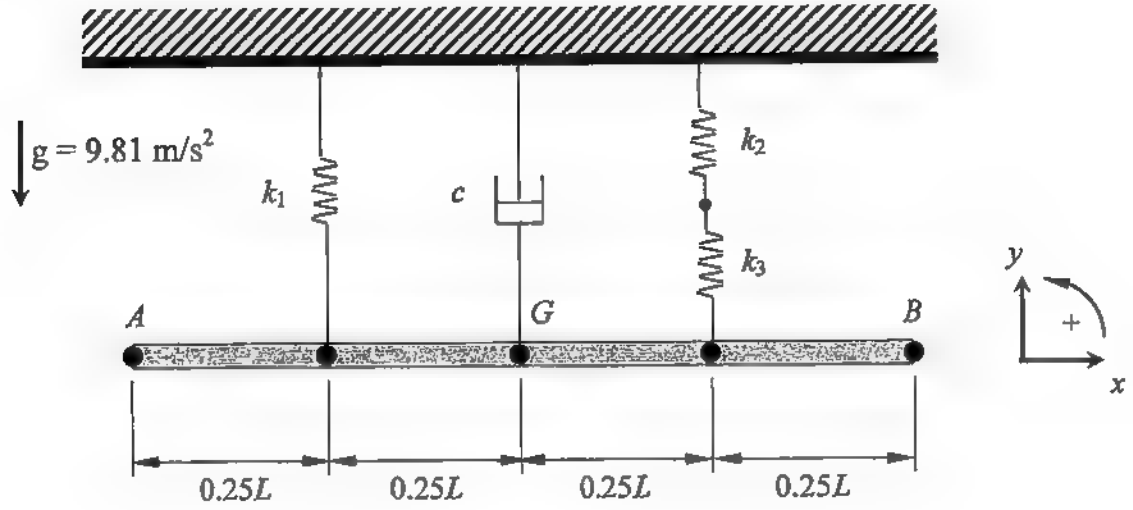

MIE100S Dynamics: Winter 2014

Final Exam April 25, 2014

9:30 a.m. noon

1. A person standing firmly at point P pulls on a rope that is attached to ball A of mass m_A 20 kg. The ball travels along a curvilinear path parallel to the ground, with initial radius r_0 10 m, initial θ_0 0, and initial angular rate of rotation $\dot{\theta}_0$ 0.15 rad/s. Motion is in the horizontal plane, and friction is negligible. Assume that both A and B have extremely small size.

   The rope from P to A is pulled inward at a constant speed $\dot{r}$ −2.0 m/s. At r 6.0 m, ball A collides with ball B (m_B 25 kg), which is initially at rest.

(a) Find the initial angular momentum of ball A about point P, at r 10 m.

(b) Determine the angular acceleration a_θ and the angular velocity $\dot{\theta}$ of ball A at r 8.0 m.

(c) Determine the magnitude of the tension in the rope PA when r 7.0 m, if the angular velocity is $\dot{\theta}$ 0.31 rad/s at that time.

(d) If A stops completely after hitting B at r 6.0 m, what is the speed of B (v_B') after the collision?

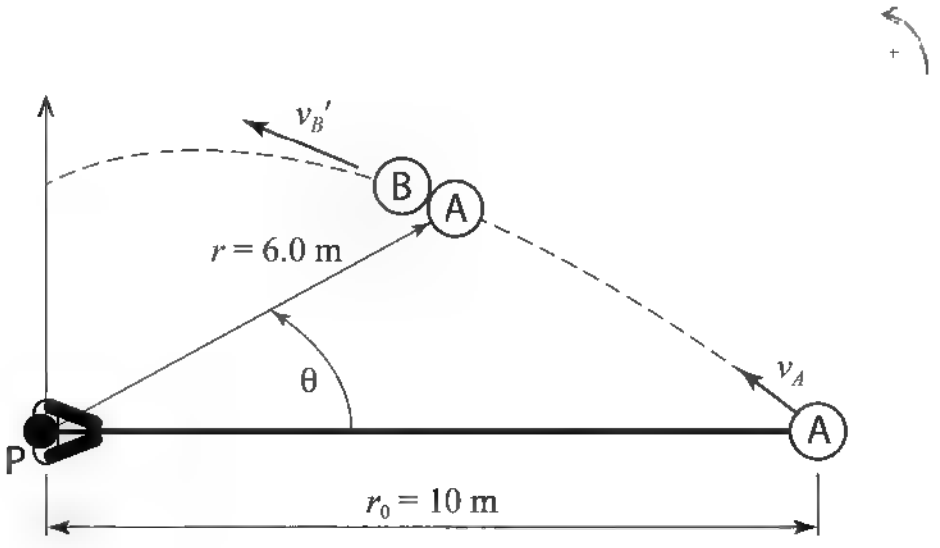

(Note: All of the motion takes place in a horizontal plane as shown in the diagram.)

2. Point C has a velocity of -1.2 $\hat{i}$ *m/s*, and an acceleration of -1.4 $\hat{i}$ *m/s*^{2} at the instant shown in the diagram. Bar BC is pinned to bar AB at point B, and bar AB is pinned to the ground at point A, as shown in the diagram. One end of bar BC is sliding on a brick wall as shown in the diagram. Use the given coordinate system and sign conventions.

(a) Find ω_{AB} and ω_{BC} at the instant shown in the diagram.
(b) Find α_{AB} and α_{BC} at the instant shown in the diagram.

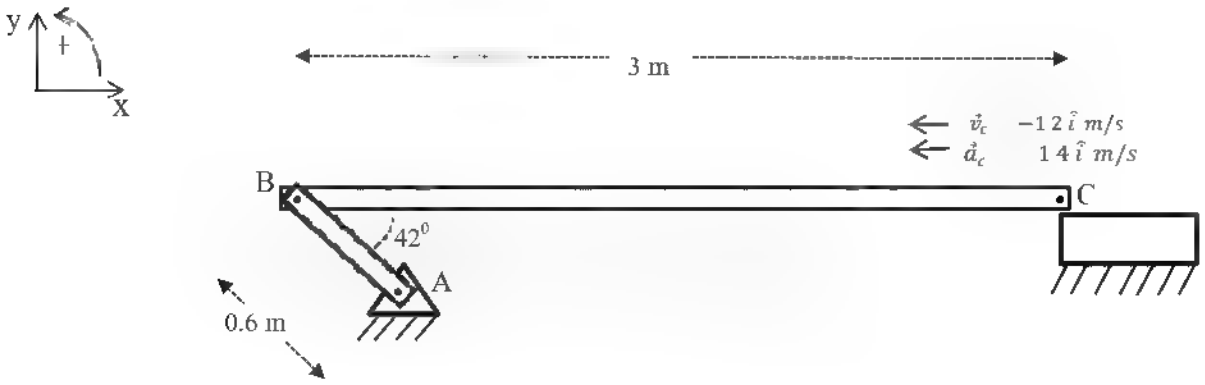

3. A long slender uniform rod AB has a mass 2.0 kg and length 1.5 m. The rod is released from rest on a frictionless surface in the position shown. Use the given coordinate system and sign conventions.

(a) Draw a free body diagram of the rod just after its release.
(b) Find the relationship between the acceleration of the center of mass $\vec{a_G}$ of the rod and the angular acceleration α of the rod.
(c) Find the force exerted by the floor on the rod just after its release.
(d) Find the acceleration of point A immediately after the release of the bar.

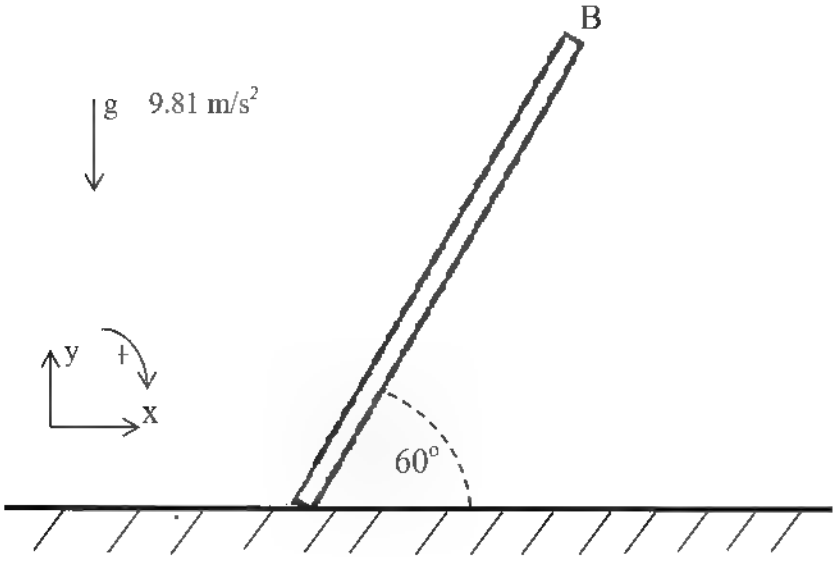

4. A sphere with mass m 0.1 kg, radius R 0.2 metres, and radius of gyration k_G 0.1264 metres sits at rest on the ground. The coefficients of friction between the sphere and the ground are μ_S 0.4 and μ_K 0.2. Neglect air friction.

   The sphere is struck with a constant impact force of 3 N at a distance 0.25 metres above the ground as shown in the figure. The impact lasts 0.05 seconds. The sphere then rolls horizontally on the ground for 0.5 m, and then up a ramp, as shown.

   Use the given coordinate system and sign conventions.

a) Prove that the wheel will roll without slip during the impact by the 3 N force.
b) Find the velocity of the sphere's centre of mass immediately after impact.
c) How much work is done by friction on the sphere when it rolls horizontally on the ground for 0.5 m?
d) What is h, the maximum height that the sphere's centre of mass reaches, measured from the ground as shown?

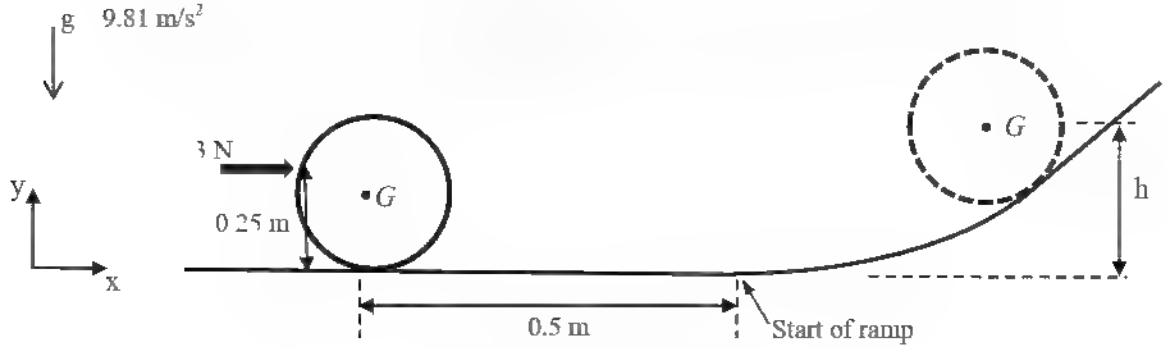

(Figure not to scale)

5. The block B has a mass of 4 kg, and is suspended between the floor and ceiling as shown in the diagram. The position of the block is y 0 when the block is at rest.
k_1 10 N/m; k_2 20 N/m; k_3 30 N/m. Ignore any rotation of the block.

(a) If C 14 N s/m, find the damped frequency of vibration ω_d of block B.

(b) Let C 14 N s/m, and the amplitude of oscillation be equal to 0.75 m at time t 0. Find the amplitude of oscillation at t 2.5 seconds.

(c) A force $\vec{F}$ $12\,\hat{j}\sin(5t)$ Newtons is applied to block B, where t is time measured in seconds. Find the amplitude of oscillation of block B, **if C = 0 N·s/m**.

(d) For part (c), find the frequency of oscillation in cycles per second.

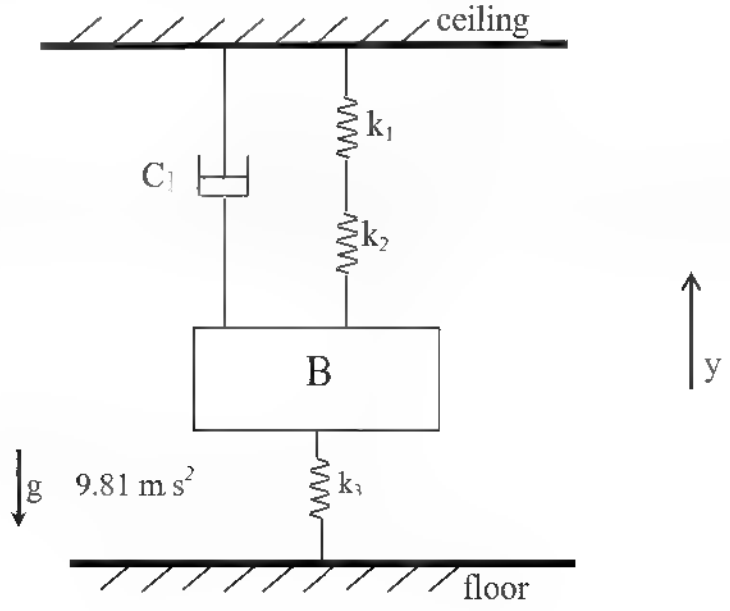

MIE100 – Dynamics

Final Examination

April 23, 2012, 9:30 a.m. - noon

1. A 1 *kg* particle is pushed by a forked rod along a curved channel that guides its direction of motion. The channel's geometry is given by the equation $r = 0.3(2 + cos\theta)$, where r is the distance in meters from the axis O of the forked rod to the channel. There is no friction. A small motor located at the axis O forces the forked rod to rotate at a constant angular speed of $\dot{\theta} = -0.5\ s^{-1}$.

a) Determine the acceleration $\vec{a}$ of the particle in r-θ coordinates, when $\theta = 90°$. *(10 marks)*

b) Determine the force that the channel exerts on the particle, when $\theta = 0°$. *(5 marks)*

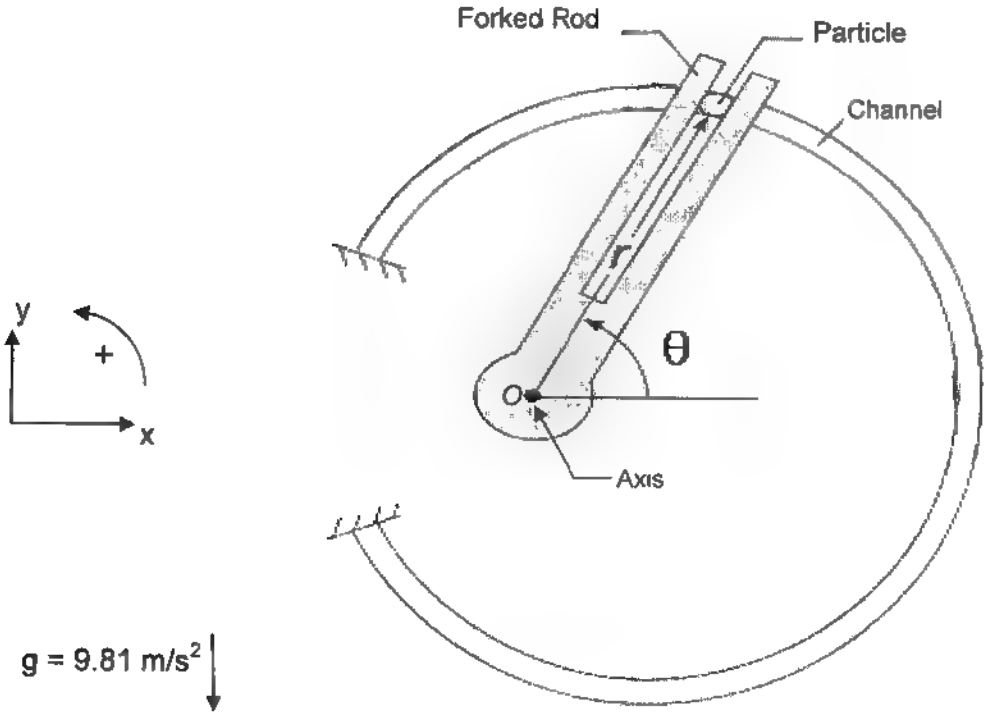

2. A uniform disk with a mass of 5 *kg* and radius of 0.5 *m* is moving up an inclined plane. At the instant shown, the center of the disk *G* has a speed of 2.0 *m*/s.

a) Determine the minimum coefficient of static friction required so that the disk does not start to slip. *(5 marks)*

b) Determine the angular acceleration of the disk at the instant shown, if $\mu_S = 0.85$ and the disk rolls without slipping. *(5 marks)*

c) Determine the kinetic energy of the disk at the instant shown, if $\mu_S = 0.85$ and the disk rolls without slipping. *(5 marks)*

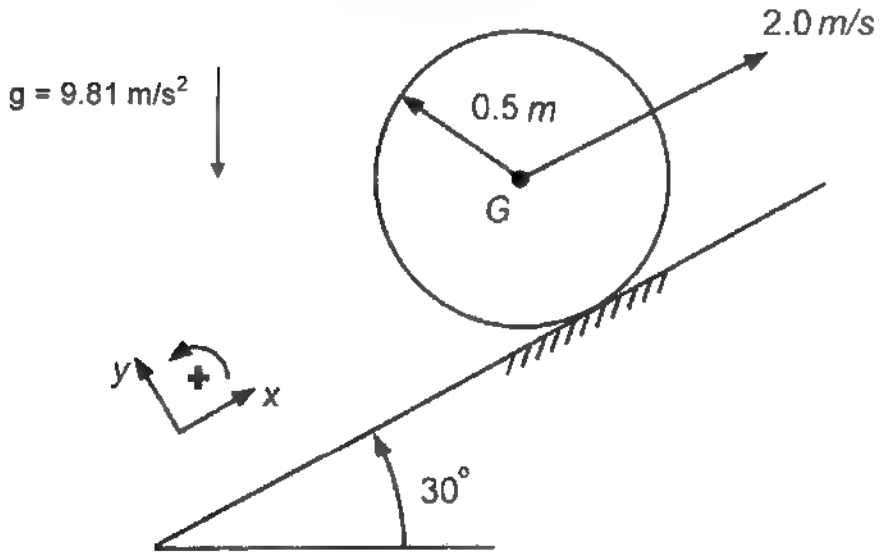

3. Consider the mechanism shown in the figure below. At the instant shown, the link AB has an angular velocity of $\omega_{AB} = -4\ s^{-1}$, and an angular acceleration $\alpha_{AB} = 0$. At the instant shown below, find the following:

a) The acceleration $\vec{a}_B$ of point B in *x-y* coordinates. *(5 marks)*
b) The location of the instantaneous center of zero velocity for link CB. Show your answer clearly in a diagram of link CB. *(5 marks)*
c) The angular velocity ω_{CD} of link CD. *(5 marks)*

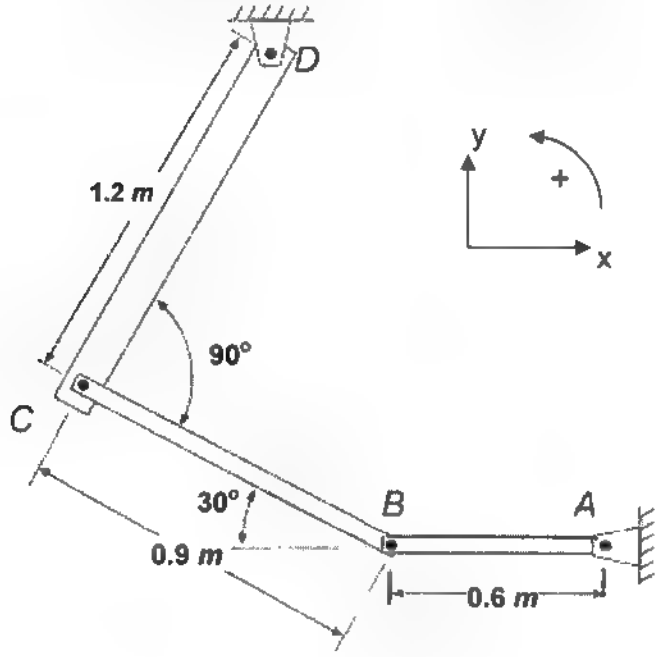

4. A 1.0 *kg* block is at rest on top of a spring with a stiffness $k = 150$ N/*m*. A 0.5 *kg* ball of clay is released from rest at a height of 10 *m* above the top surface of the block. The clay hits the 1.0 *kg* block and sticks to it.

a) What is the total amount of kinetic energy of the block with clay stuck onto it, immediately after the collision? *(5 marks)*

b) Determine the force exerted by the spring on the block, at the instant when the block reaches its lowest point. *(10 marks)*

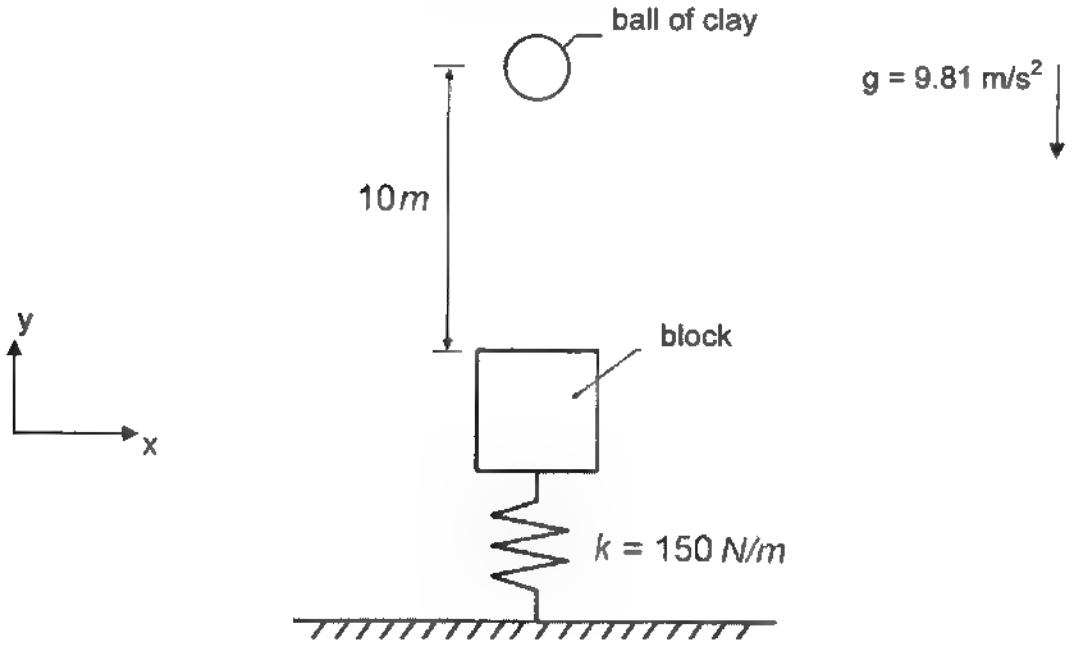

5. You are playing a game where you spin an arrow on a circular game board by applying a force with magnitude $P = 10\ N$ to the arrow with your hand for an extremely short time Δt, as shown below. The game board is fixed and lying flat on a table such that gravity has no effect.

   The arrow is initially at rest when the force is applied at the instant shown. The arrow spins about its centre of mass at point O, and its rotation is resisted by a constant frictional moment of magnitude $M_o = 0.08\ N{\bullet}m$. The arrow has mass of 0.25 kg and its radius of gyration about point O is $k_o = 0.03\ m$.

(a) Determine the time duration Δt required for application of the force so that the arrow will make exactly two full rotations before coming to rest pointing at the letter "A". *(10 marks)*

(b) What is the angular impulse about O given to the arrow by your hand? *(5 marks)*

(c) How much work is done by the frictional moment M_o? *(5 marks)*

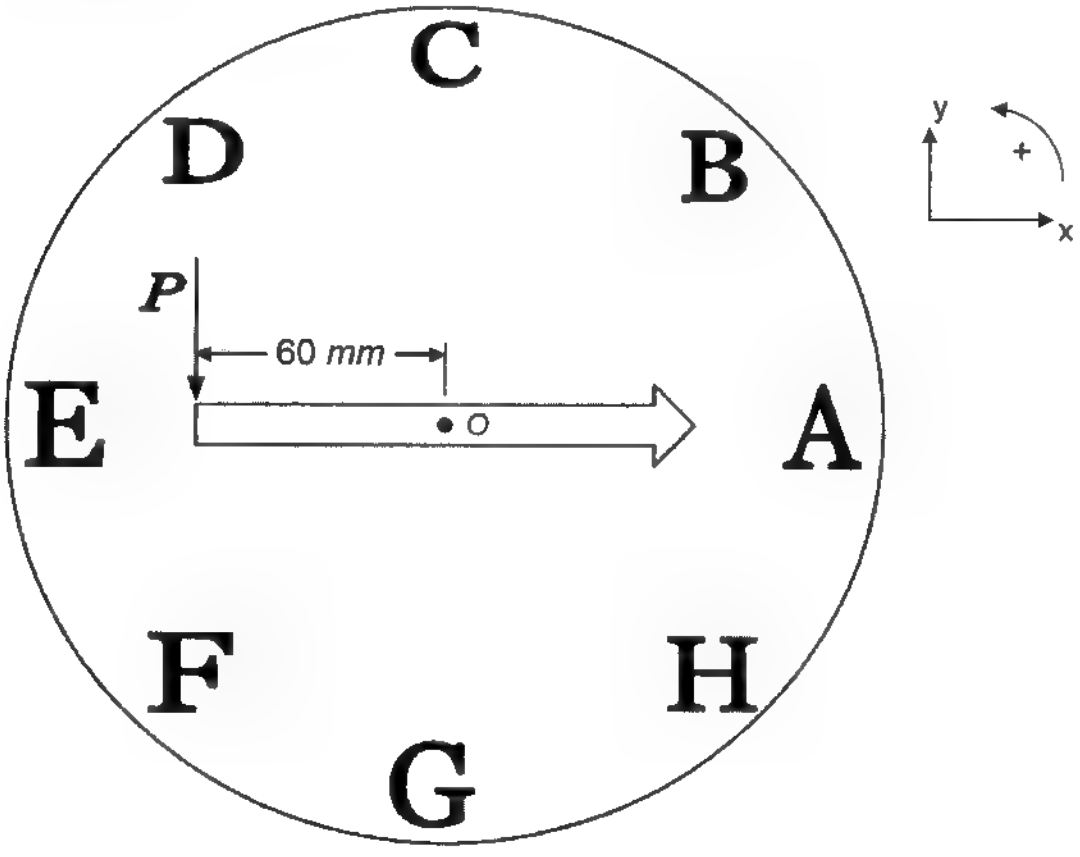

6. A non-uniform bar has a mass m and a moment of inertia I_G about its centre of mass at G. The bar is pinned at point O at a distance L from point G. As the bar rotates about O, the pin joint exerts a resistive moment on the bar with a magnitude $c\dot{\theta}$ that is proportional to its angular speed.

   The bar is released from rest at $\theta = 5$ degrees from its equilibrium position at time $t = 0$, resulting in the motion plotted below.

a) Draw a free body diagram of the oscillating bar and derive the second-order differential equation of motion for $\theta(t)$ in terms of the parameters m, L, I_G, and c. Assume that the amplitude of oscillations is small. *(5 marks)*

b) Estimate a value for the *damped* natural frequency ω_d. *(5 marks)*

c) Estimate the damping ratio, c/c_c. *(5 marks)*

d) By how many percent would the period of oscillation τ increase or decrease if the resistive component c were removed from the system? *(5 marks)*

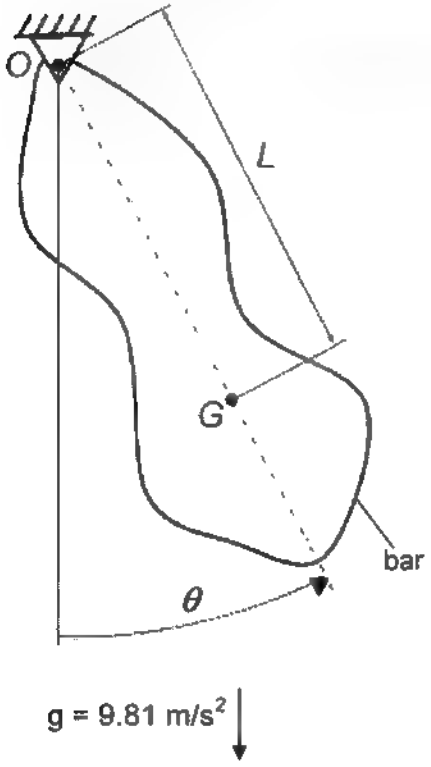

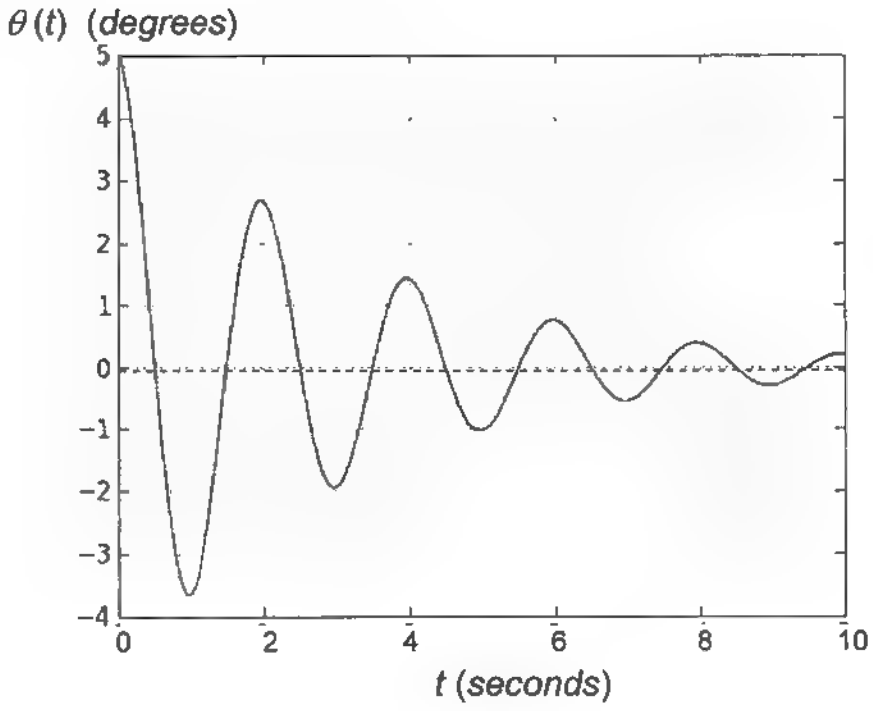

MIE100 – Dynamics

Final Examination

April 18, 2011, 2:00pm to 4:30pm

1(a). A projectile enters a plastic block at $x = 0$ with an initial speed $v_o = 270$ m/s and travels 100 mm before coming to rest. Assume that the speed of the projectile is defined by the relation $v = v_o - Kx$, where v is expressed in m/s, x is in meters, and K is a constant.

(10) Find the initial acceleration of the projectile, just as it enters the plastic block.

Figure 1a

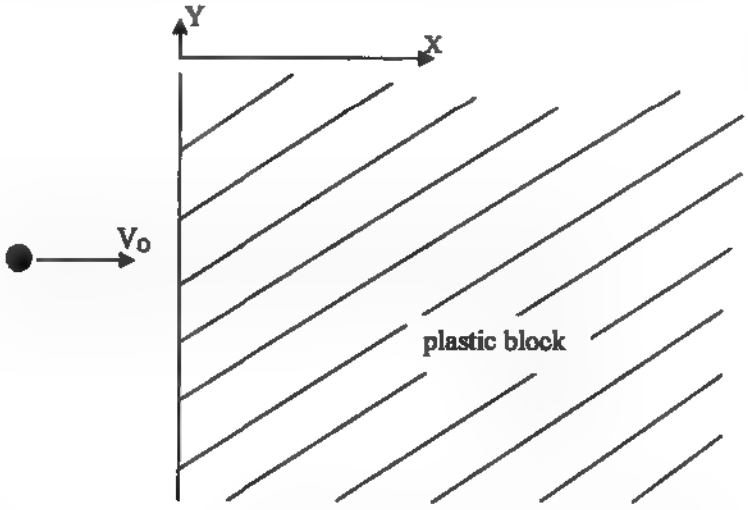

1(b). The flight path of airplane B is a horizontal straight line that passes directly over a radar tracking station at A. Knowing that the airplane moves to the left with a constant speed v_C, determine $d\theta/dt$ in terms of v_C, h and θ.

(10)

20 marks

Figure 1b

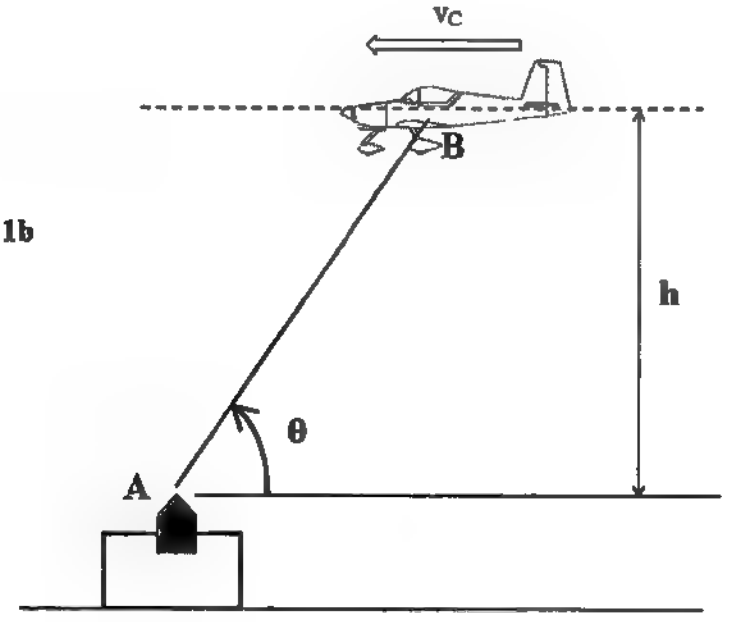

2. A wheel on a 40° degree ramp is released from rest. The wheel has mass m = 5.00 kg, radius R = 1.00 m, and radius of gyration, k_G = 0.800 m. The static and kinetic coefficients of friction between the wheel and ramp are μ_s = 0.300 and μ_k = 0.280, respectively. Use the rectangular coordinates aligned with the ramp as shown.

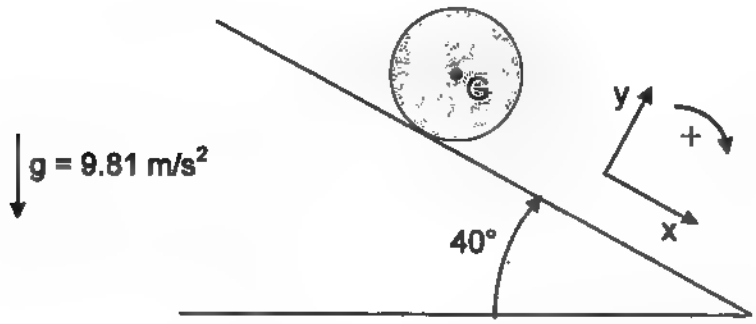

Figure 2

(10) (a) Show that the wheel slips as it rotates.

(5) (b) Determine α, the angular acceleration of the wheel.

(5) (c) Determine $\vec{a}_G$, the acceleration of the centre of mass of the wheel.

20 marks

3. The oil pumping rig is driven by wheel OA which has radius R = 0.750 m and rotates about a fixed axis at point O. Link AB is 2.50 m long. The distance from B to the fixed axis at C is also 2.50 m. At the instant shown, wheel OA has angular velocity ω_{OA} = -1.00 rad/s and angular acceleration α_{OA} = - 0.500 rad/s^2.

(4) (a) Determine the angular velocity of link AB, ω_{AB}, at the instant shown.

(4) (b) Determine the angular velocity of rod BCD, ω_{BCD}, at the instant shown.

(4) (c) Determine the acceleration of point A, $\vec{a}_A$, at the instant shown. Express your answer in the given x-y coordinate system.

(8) (d) Determine the angular acceleration of rod BCD, α_{BCD}, at the instant shown.

20 marks

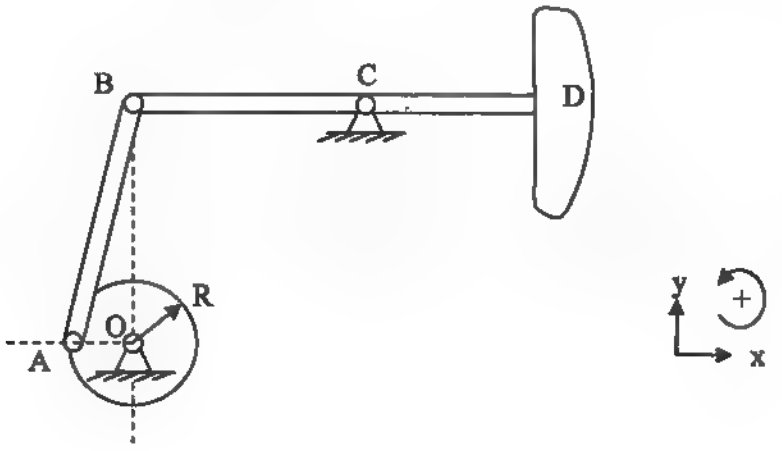

4. ABC is a slender, uniform rod of length 10.0 meters and mass 15.0 kg. It is pinned at point B. At the instant shown in the diagram where $\theta = 90^o$, the velocity of point C is $-12.0\,\hat{\jmath}\ m/s$.

(8) (a) Find the acceleration of point C in x-y coordinates at the instant shown.

(4) (b) Find the angular momentum about point B of the rod at the instant shown.

(8) (c) Find the velocity of point C when the bar first reaches a vertical position, where $\theta = 180^o$.

20 marks

Note: The pinned bar rotates without friction.

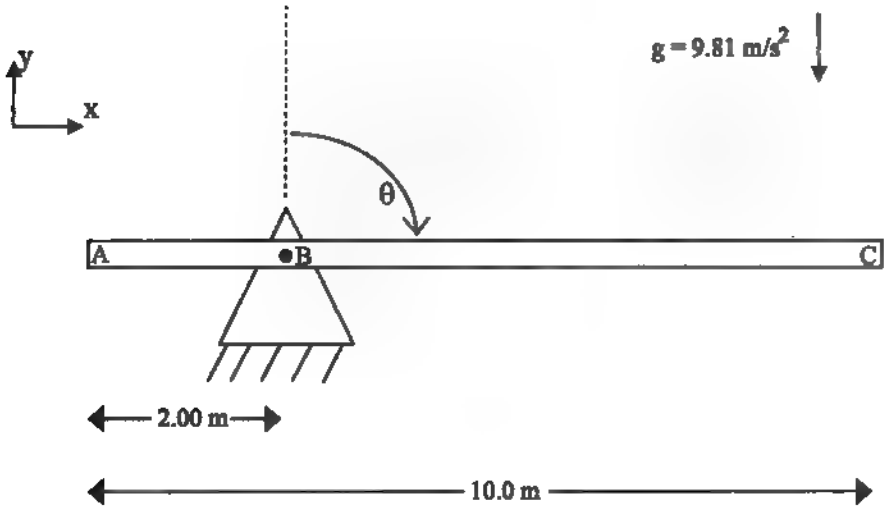

5. A mass is assembled with two springs and one damper as shown. A force $\vec{P} = 45.0\,\hat{j}$ N has been applied to the mass such that a static equilibrium has been reached. It is this static equilibrium position that is shown in the diagram. Neglect any rotational motion of the mass.

(3) (a) How far are the two springs stretched beyond their relaxed length in the position shown? (Both springs have the same relaxed length.)

At time t=0, the force $\vec{P}$ is removed.

(3) (b) Draw a Free Body Diagram of the mass just after $\vec{P}$ has been removed. Indicate the numerical magnitudes and proper directions of all forces on the Free Body Diagram.

(3) (c) Find the undamped natural frequency of the system, ω_n.

(3) (d) Find the damping ratio of the system, c/c_c.

(3) (e) Find the damped frequency of the system, ω_d.

(5) (f) After the force $\vec{P}$ is removed at time t=0, find the maximum displacement of the mass relative to y = 0 as indicated on the diagram.

20 marks

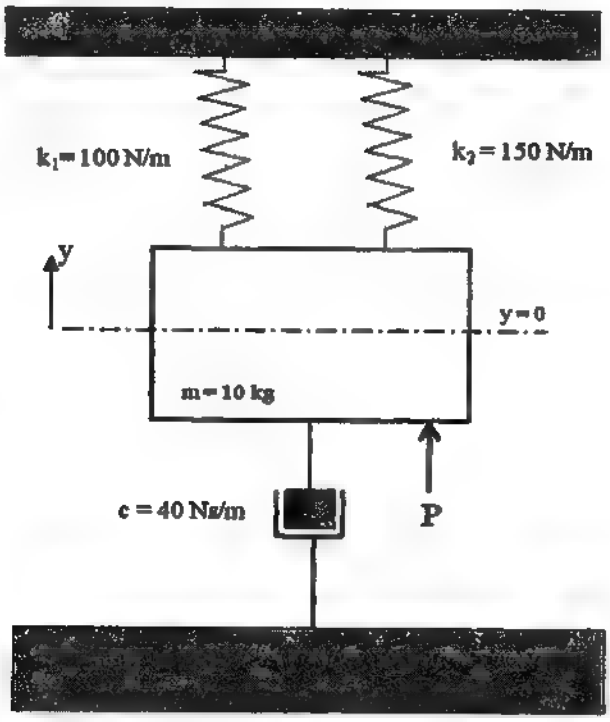

FINAL EXAMINATION

April 23, 2010 9:30am

Exam Duration: 2.5 hours

First Year

MIE100H1S – DYNAMICS

Question 1

A mass, initially at rest, is subject to a non-constant force, $\vec{P} = 100t\,\hat{\imath}$ Newtons, where t is measured in seconds. You may assume the mass translates and does not rotate.

How much time will it take for the mass to reach a speed of 10 m/s? (20 marks)

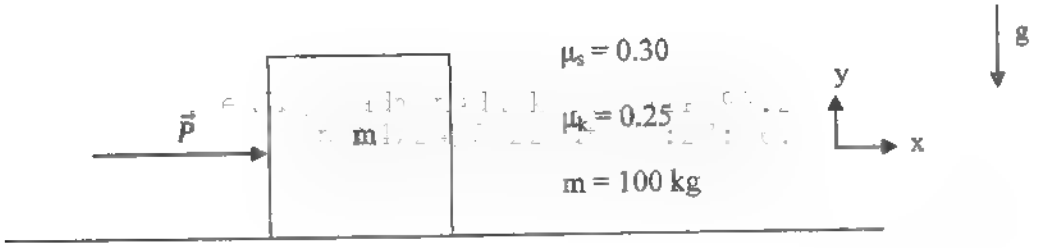

Question 2

Bar AB is rotating counterclockwise and, at the instant shown, the speed of point B is 5.1 m/s.

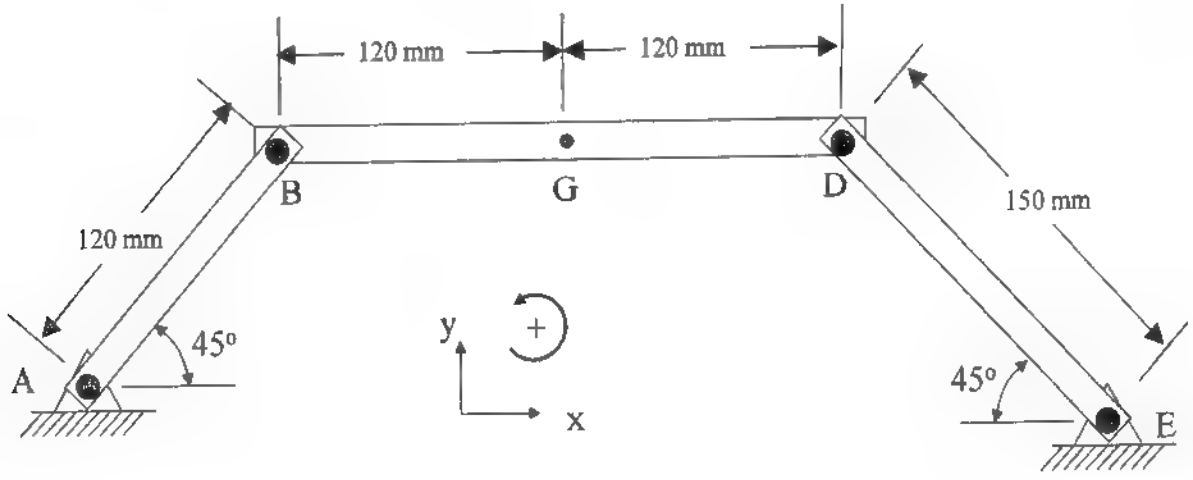

a) What is the velocity of point B in x-y coordinates? (5 marks)

b) What is the angular velocity of bar AB? (5 marks)

c) Determine the speeds of points G and D at this instant. (5 marks)

d) Determine the angular velocities of bar DE and bar BD at this instant. (5 marks)

Question 3

A rectangular crate of mass 100 kg rests on a conveyor belt as shown. The crate's height and width are 1.40 metres and 0.80 metres respectively. Assume the crate is uniform such that its centre of mass is located in the middle at G as shown. The coefficients of static and kinetic friction between the crate and the belt are $\mu_s = 0.60$ and $\mu_k = 0.50$.

a) Determine the largest acceleration that the belt can have in the positive x-direction without causing the crate to tip or slip. (10 marks)

b) At t = 0 the belt accelerates from rest with $\vec{a}_{belt} = 5.70\,\hat{\imath}$ m/s^2 and the crate will begin to tip about point Q. Determine $\vec{a}_G$ and α for the crate at the instant t = 0. The moment of inertia of the crate about G is: $I_G = \frac{1}{12}m(a^2 + b^2)$, where a and b are the height and width. Note that for the crate at this instant $\omega = 0$, $\alpha \neq 0$, and point Q does not slip relative to the belt. (10 marks)

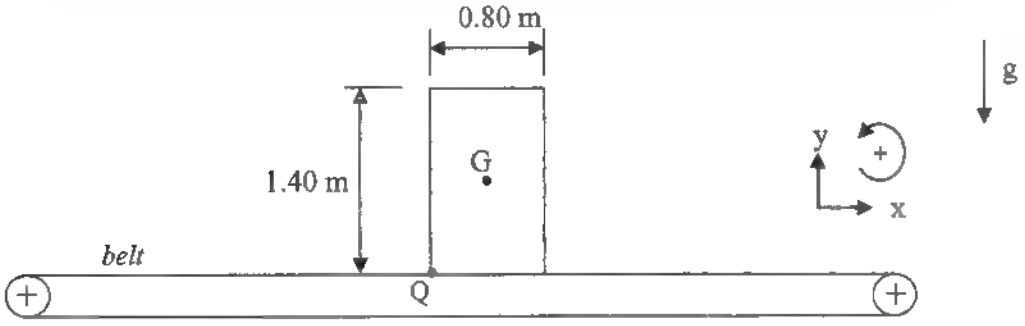

Question 4

A wheel has mass m = 8.0 kg, radius R = 1.2 metres, and radius of gyration k 0.70 metres. At the instant shown in the diagram, its center of gravity has a speed of 5.9 m/s, as the wheel rolls without slipping down the hill. At the bottom of the hill, it strikes the stationary block B of mass 5.0 kg; the wheel then stops rolling and sticks to the block B. The wheel and block then both slide to the right together.

a) At the instant shown in the diagram, what is the magnitude of the total acceleration of point C on the wheel, located at the edge of the wheel where it is touching the ground? (5 marks)

b) At the instant shown in the diagram, what is the acceleration of the centre of the wheel, in n-t coordinates? (5 marks)

c) What will be the speed of the centre of the wheel after the wheel has decreased its elevation by 2.5 metres, just before the wheel strikes the block B? (5 marks)

d) What will be the speed of the block and wheel immediately following the collision, as they slide to the right stuck together? (5 marks)

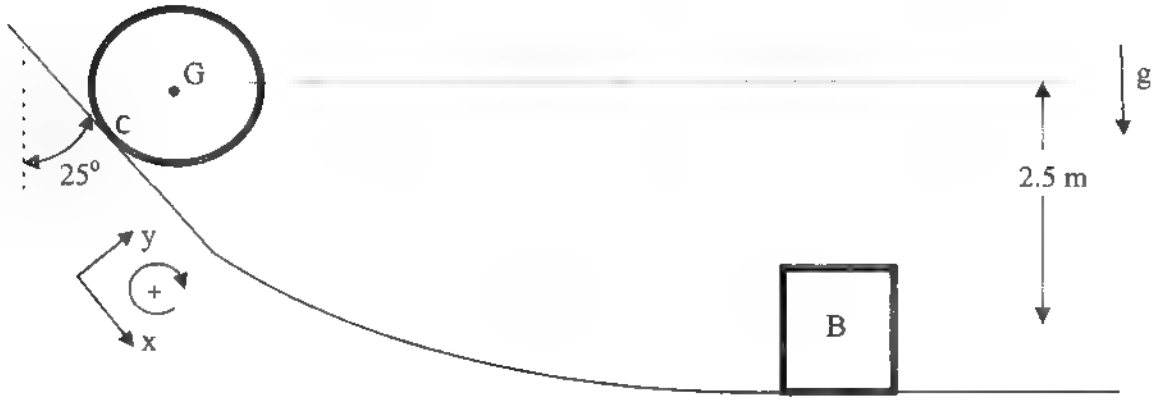

Question 5

The homogeneous slender rod of mass m = 16 kg and length L = 850 mm is supported by a pin at A and is able to rotate about A. The bar is connected to a spring and damper as shown.

The bar is initially in equilibrium with the spring relaxed at the position shown in the diagram on the left.

a) What is the moment of inertia of the rod about A? (5 marks)

b) What is the differential equation for the motion of the rod in terms of θ? Assume the motion only involves small angles of θ. (5 marks)

c) What is ω_d the damped natural frequency of the rod? (5 marks)

d) Is the system underdamped, overdamped or critically-damped? Why? (5 marks)

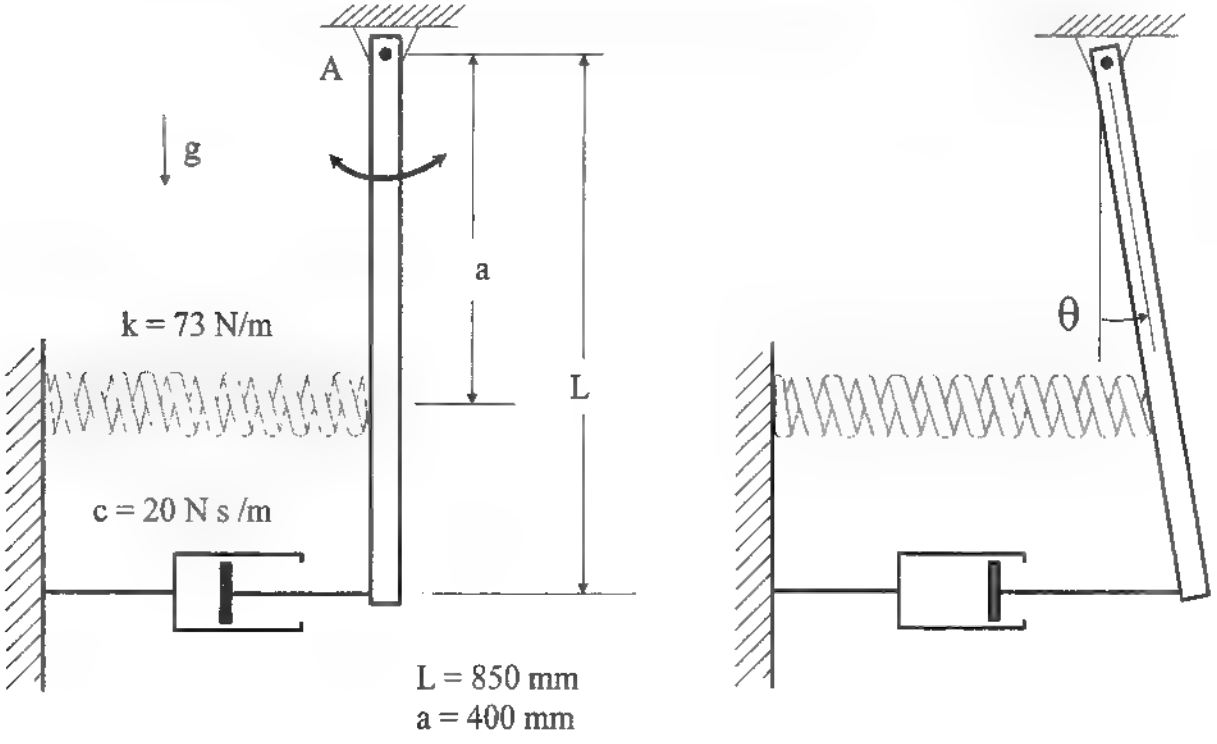

FINAL EXAMINATION

May 01, 2009 2:00pm

Exam Duration: 2.5 hours

First Year – Mechanical and Industrial Engineering

MIE100 – Dynamics

1. The slender uniform bar OA of length 3 meters and mass 7 kg is pinned to the ceiling at point "O". The angle θ is measured with respect to the vertical as shown in the diagram. There is no friction. In addition to the force of gravity, there is a constant external torque of $\vec{M}$ = 50 N·m applied to the center of the bar in the positive direction as shown. At the instant shown in the diagram, θ is 90°, and the velocity of point "A" is -2ĵ m/s.

   (a) Find the angular acceleration α of the bar at the position shown in the diagram. [5 marks]
   (b) Find the velocity of the center of gravity of the bar in x-y coordinates when θ first reaches 180°.[10 marks]
   (c) Find the acceleration of point "A" in x-y coordinates when θ first reaches 180°. [10 marks]

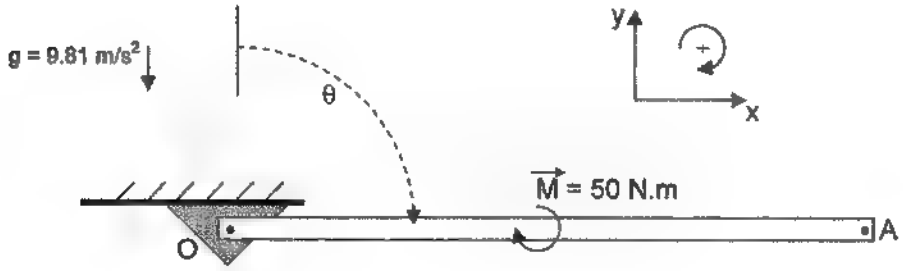

2. The flywheel shown has a radius of 0.5 m, a radius of gyration of 0.3 m, and a mass of 100 kg. The flywheel is pinned at its centre. The 25 kg block A is attached to a wire wrapped around the flywheel. At the instant shown, the block is traveling up at a velocity of 7.5ĵ m/s. The acceleration of A is constant and is equal to 5ĵ m/s².

   (a) Find the velocity of block A once it has moved up 0.5 m. [10 marks]
   (b) Find the average torque exerted by the motor driving the flywheel as block A moves 0.5 m up from its position at the instant shown. [10 marks]

   Assume the wire is sufficiently long such that the block A does not touch the flywheel as it travels upward.

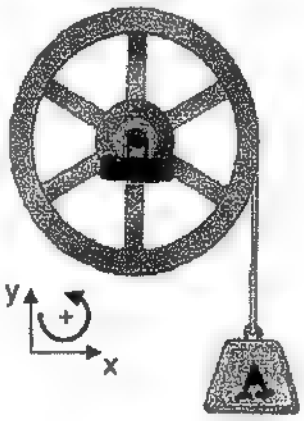

3. A 4 kg collar slides without friction on a horizontal rod. The collar is attached to a linear spring with spring constant 450 N/m. An external force P = (13 sin 5*t*) N acts on the mass.

   Find the amplitude of the resulting motion and indicate whether it is in phase or out of phase with the forcing function. [10 marks]

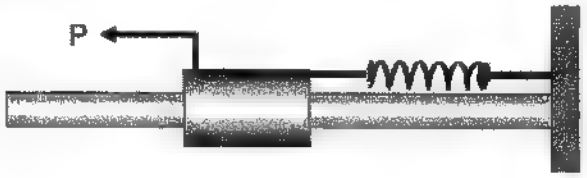

4. At the instant shown in the figure, point B on the T-shaped bar has a velocity of $1\hat{\imath}$ m/s and an acceleration of $2\hat{\imath}$ m/s^2.

   (a) Find the velocity of point D in x-y coordinates. [5 marks]
   (b) Find the angular velocity of the T-shaped bar. [6 marks]
   (c) Find the angular acceleration of the T-shaped bar. [7 marks]
   (d) Find the acceleration of point D in x-y coordinates. [7 marks]

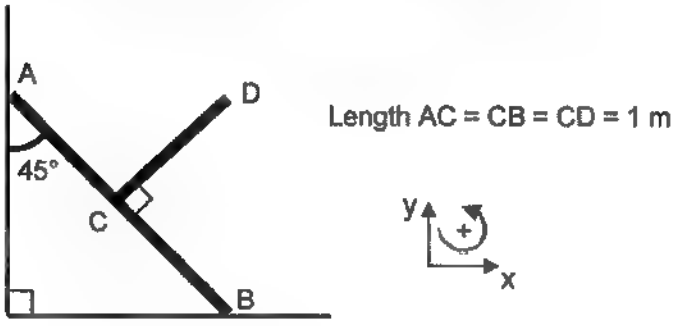

5. A uniform circular disk with radius 0.5 m and mass 10 kg is released from rest on the incline shown. Find its angular velocity after G has moved 0.75 meters. [20 marks]

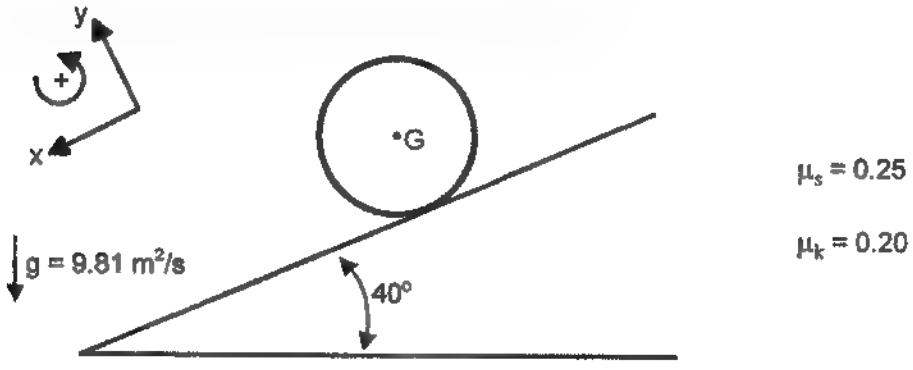

FINAL EXAMINATION

April 18, 2008 2:00 p.m.

Exam Duration: 2.5 hours

First Year – Mechanical and Industrial Engineering

MIE100 – Dynamics

Question 1

Sphere A and sphere B are identical, each having mass m 2.5 kg and radius r = 1 m. Sphere A rolls without slipping with a velocity v_G = 1 m/s on a rough horizontal surface until it strikes sphere B, which is initially at rest. Immediately after impact, sphere A stops *translating*. In the questions below you may neglect friction *between sphere A and sphere B.*

Note that I_G for a sphere is $\frac{2}{5}mr^2$.

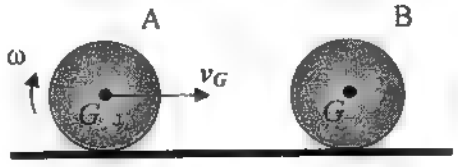

a) Show that the speed of the centre of mass of sphere B immediately after impact is 1 m/s. (4 marks)

b) Show that the angular velocity of sphere B immediately after impact is zero State your assumptions. (3 marks)

c) Determine the speed of the centre of mass of sphere B once it starts rolling without slipping. (8 marks)

d) Determine the work done by friction on sphere B from the point immediately after impact until the point at which sphere B starts rolling without slipping. (8 marks)

e) How much work is done by friction on sphere B once it starts rolling without slipping? (2 marks)

Question 2

The uniform, slender rod AB is positioned so that $\theta = 30°$ and then is released from rest. The small roller at A, which is frictionless and has negligible mass, will roll down the vertical surface. Point B will slide to the right along the rough horizontal surface. Immediately after release, the initial angular acceleration (α) of rod AB is 0.5 rad/s^2 counterclockwise. The length of rod AB is 1.2 m.

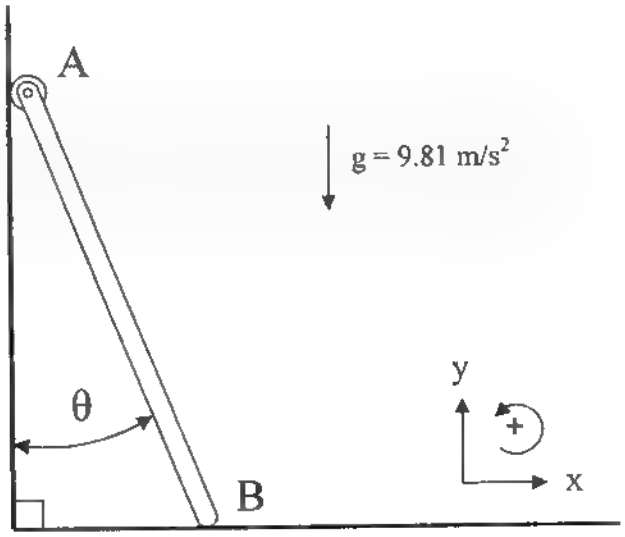

a) Find $\vec{a}_A$, the initial acceleration of point A, expressed in x-y coordinates. (7 marks)

b) Find $\vec{a}_G$, the initial acceleration of the rod's centre of mass, expressed in x-y coordinates. (8 marks)

c) Given that the mass of rod AB is 10 kg, determine the initial friction force that must be present at point B immediately after release. (10 marks)

Question 3

Block A of mass 50 kg is suspended from the ceiling by a spring with stiffness constant k_1 = 800 N/m, and a dashpot of strength C. The mass moves only in the vertical direction, without rotation.

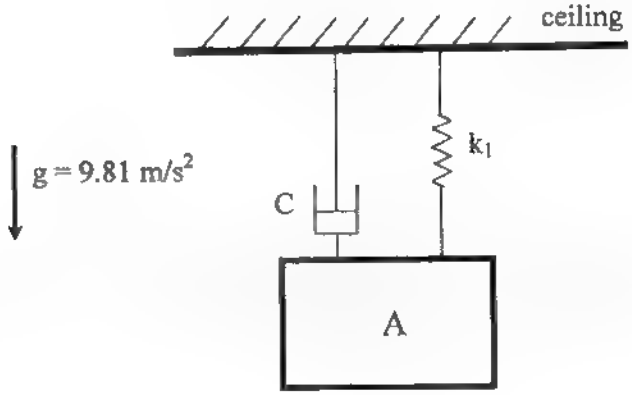

a) What is the period (τ) of natural vibration of the mass, if C = 0? (6 marks)

b) Suppose that A is vibrating in the vertical direction, with an amplitude of vibration equal to 0.5 m. What is the maximum acceleration of A? Assume that C = 0. (6 marks)

c) What value of C would be required to reduce the amplitude of vibration from 0.5 m to 0.2 m in 15 seconds? (7 marks)

d) Suppose that an earthquake were to make the ceiling vibrate vertically with an amplitude of 3 mm at a frequency of 5 rad/s. What would be the amplitude of vibration of A? Assume C = 0. (6 marks)

Question 4

A spool (a wheel with an inner hub) rolls without slipping down an incline on its inner hub as shown. The radius of the inner hub (R_i) is 0.4 m and the radius of the outer wheel (R_o) is 0.8 m. A, B, C, D and E are points on the wheel.

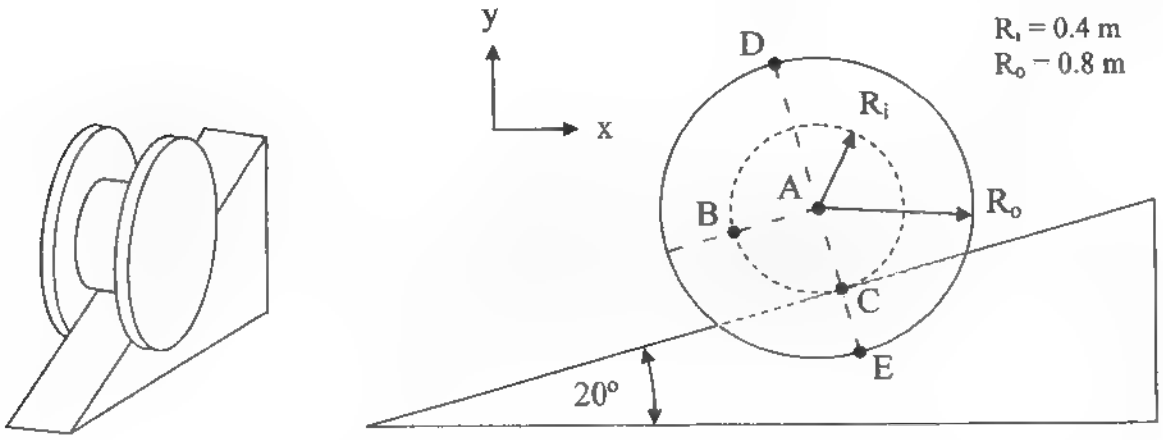

Point A is the centre of the wheel and is moving with a speed of 2 m/s. The speed of point A is increasing at a rate of 0.25 m/s^2.

a) What is the velocity of point A expressed in x-y coordinates? (4 marks)

b) What is the velocity of point A expressed in n-t coordinates? (4 marks)

c) Where is the instantaneous centre of zero velocity? (3 marks)

d) What is the velocity of point B expressed in x-y coordinates? (6 marks)

e) What is the acceleration of point E expressed in x-y coordinates? (8 marks)

FINAL EXAMINATION

April 20, 2007 9:30 a.m.

Exam Duration: 2.5 hours

First Year – Mechanical and Industrial Engineering

MIE100 – Dynamics

Question 1

At t= 0 a particle is located at (2,0) on a rectangular set of axes. Thereafter, its location is

$(2, -\frac{t^3}{6})$ where t is in seconds and (x,y) are in meters.

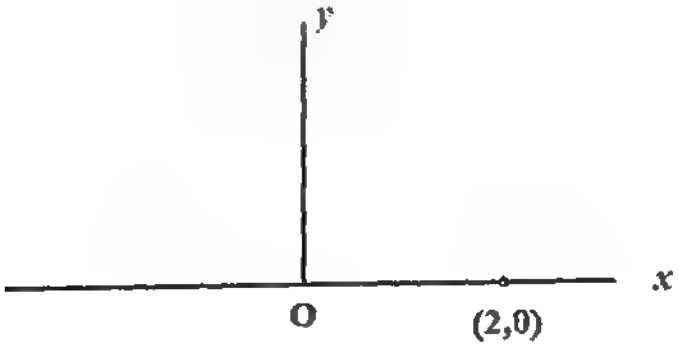

a) What is the particle's velocity at t=2 seconds? Use the rectangular axes as given. (4 marks)

b) What is the particle's velocity at t=3 seconds? Use normal and tangential axes. (4 marks)

c) What is the particle's acceleration at t=4 seconds? Use polar co-ordinates centered at O.

(6 marks)

d) If a second particle starts with zero velocity at (2,0) and its acceleration is $\vec{a} = +\frac{t^3}{6}\hat{j}$, then

how far has it traveled in 5 seconds? (6 marks)

Question 2

A thin, uniform rod of mass 3 kg and length 4 m rotates in the *horizontal* plane about a pivot point, O. Kinetic friction between the rod and its pivot points results in a constant frictional moment about point O of unknown magnitude. The rod is initially at rest.

At t=0, a motor is turned on. The motor applies a constant clockwise moment of 100 N·m to the rod about point O. At t=3 seconds, the motor is turned off, and from that point the rod continues to rotate for another 45° before it comes to a stop.

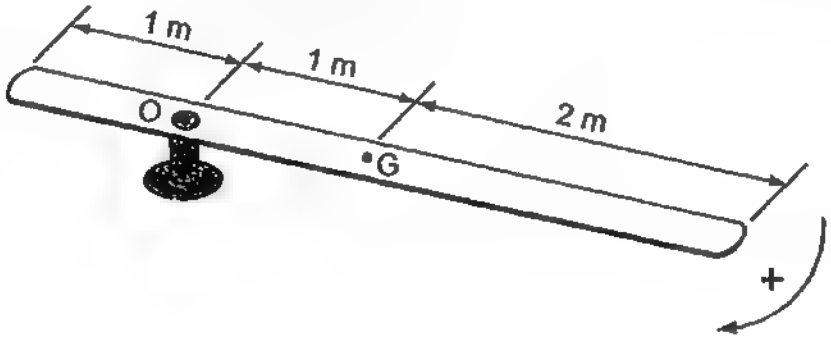

a) Determine the angular velocity when the motor is turned off at t=3 seconds. (8 marks)

b) Determine the magnitude of the moment due to friction. (8 marks)

c) Determine the total work done on the rod by non-conservative forces from t=0 until the rod stops rotating. (4 marks)

Question 3

The mass m=10 kg is suspended from the ceiling by a spring of stiffness k=90 N/m, in parallel with a dashpot of strength C. The mass moves vertically, without rotation.

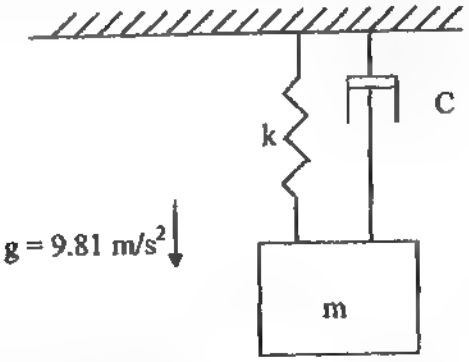

a) For what range of values of C is it possible for the mass to experience damped, unforced oscillations? (4 marks)

b) Find the approximate value of C required such that the amplitude of unforced oscillations decreases by 1% in each cycle. (Note that for this very lightly damped system $\omega_n \approx \omega_d$.) (4 marks)

c) Suppose the mass undergoes unforced oscillations of amplitude 0.2 meters, with dashpot C=0. What are the maximum and minimum values of kinetic energy of mass in each cycle? (4 marks)

d) Suppose the mass undergoes oscillations of amplitude 0.2 meters, with dashpot C=0. What are the maximum and minimum values of potential energy of the spring in each cycle? (4 marks)

e) An earthquake makes the ceiling oscillate vertically with amplitude of 8mm and a frequency of 4 cycles/second. Assume C=0. What is the amplitude of vibration of the mass? (4 marks)

Question 4

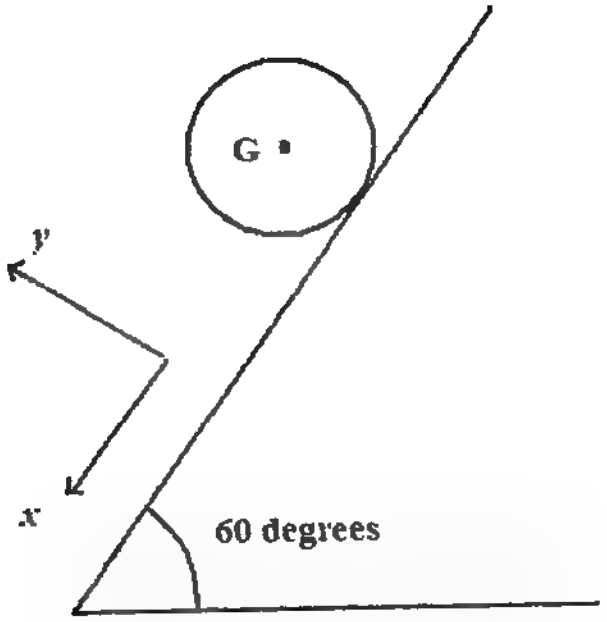

A 10-kg wheel with radius 200mm and radius of gyration of 180mm about its centre G, is released from rest on a surface which is inclined 60 degrees from the horizontal line. The wheel slips as it rotates. The kinetic coefficient of friction (μ_k) between the wheel and the inclined surface is 0.3. Use rectangular co-ordinates aligned with the incline as shown.

a) Determine the acceleration $\bar{a}_G$ of the centre G of the wheel. (10 marks)

b) Determine the wheel's angular acceleration (α). (10 marks)

Question 5

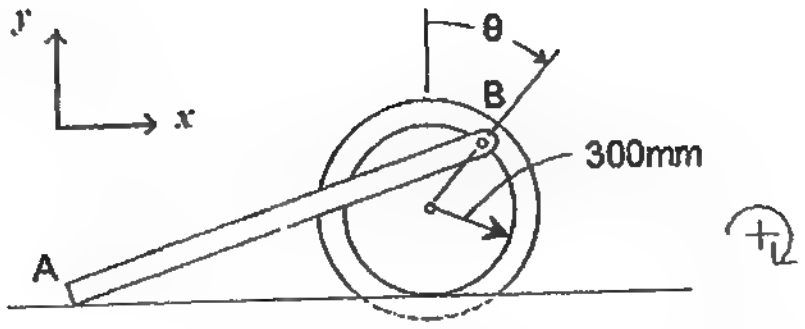

The wheel rolls to the right on its inner hub without slipping. Its center has a constant velocity of 1.5 m/s. The length of rod AB is 1.2 m.

a) Determine the angular velocity of rod AB (ω_{AB}) when $\theta = 0^\circ$ (5 marks)

b) Determine the angular velocity of rod AB (ω_{AB}) when $\theta = 90^\circ$ (5 marks)

c) At the instant when $\theta = 90^\circ$ determine the acceleration of point B. Use the rectangular co-ordinates given. (5 marks)

d) At the instant when $\theta = 90^\circ$ determine the acceleration of point A. Use the rectangular co-ordinates given. (5 marks)

UNIVERSITY OF TORONTO
FACULTY OF APPLIED SCIENCE AND ENGINEERING
MIE 100S - Dynamics

FINAL EXAM
April 26, 2006
0930 hrs. to 1200 hrs.
Examiners: R. Ben Mrad, H. Kunov, C. Simmons, A.N. Sinclair, L.A. Sinclair

Allowable Calculators: Casio260, Sharp520 or TI30

Answer all questions

TYPE C

---

1. (a) The three blocks shown move with constant velocities. The relative velocity of A with respect to C is $+0.3\hat{j}\ m/s$ and the relative velocity of B with respect to A is $-0.2\hat{j}\ m/s$. Find the velocity of B. **(10 marks)**

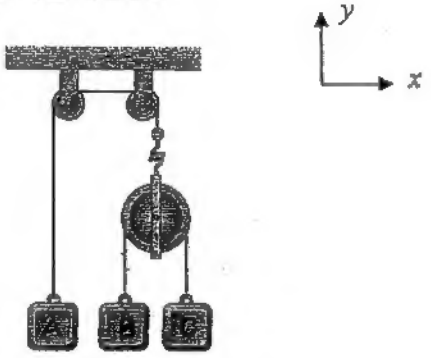

(b) A particle is located at $(r,\theta)=\left(1,\frac{\pi}{4}\right)$ with r in meters and θ in radians. Its motion can be described as:

$$\dot{r}=1\ m/s$$
$$\dot{\theta}=1\ s^{-1}$$
$$\ddot{r}=1\ m/s^2$$
$$\ddot{\theta}=2\ s^{-2}$$

Using a standard rectangular (x y) co-ordinate system for your answers (centered at $r = 0$, and the x-axis aligned with $\theta = 0$) find:

(i) the direction of the unit vector in the tangential direction. **(3 marks)**

(ii) the acceleration of the particle. **(7 marks)**

2. The 5-kg block "*A*" oscillates in the vertical direction. Assume that all springs are stretched at all times. Ignore rotation. $k_1 = 800N/m$; $k_2 = 1000N/m$; $k_3 = 1600N/m$.

(a) Find the undamped natural frequency ω_n of the system, when the damper $c = 0$. **(5 marks)**

(b) Find the damping factor c/c_c such that the damped natural frequency ω_d of the system is 97% of the undamped natural frequency ω_n. **(5 marks)**

(c) Find the damping factor c/c_c such that the damped, unforced oscillations die out to only 1/10 of their original amplitude in 25 seconds. **(5 marks)**

(d) Suppose that an earthquake causes the ceiling and floor to oscillate up and down together at 7 *Hz*, with amplitude of *X* meters. For what value(s) of *X* would the mass vibrate with an amplitude of 1 mm? Assume that the damping $c = 0$. **(5 marks)**

Accessed by sadman@duck.com (IP: 99.237.10.205)
on 04/24/2022 at 07:27:06.

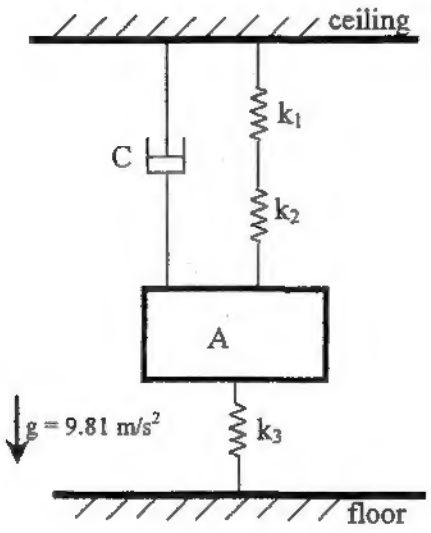

3. A uniform spinning disk drops a very short distance onto a flat horizontal surface. Initially, the disk will slip, and accelerate in a horizontal direction. Eventually, it will roll without slipping, with constant velocity. Determine the final velocity of the center of the disk. Ignore the potential energy associated with this small vertical drop. **(20 marks)**

Radius of the disk = R
Mass of disk = m
Initial angular velocity = ω_0
Kinetic and static friction coefficients = μ_k and μ_s

4. Two different crates are transported by the system shown. In each case, the uniform bar is 10 kg and the coefficient of kinetic friction (μ_k) between the crate and the horizontal surface is 0.2.

Accessed by sadman@duck.com (IP 99.237.10.205)

(a) The first crate has a mass of 40kg. The crate's linear acceleration is observed to be $+1.3\ \hat{i}\ m/s^2$ when it is in the configuration shown. Find the tension (T) in the rope. **(10 marks)**

(b) When the second crate is transported, the bar's angular acceleration is observed to be $4.5\ s^{-2}$ when it is in the configuration shown. At that point, the tension in the rope is also known to be 200 N. Find the external moment (M) at O that is being applied to the bar. **(10 marks)**

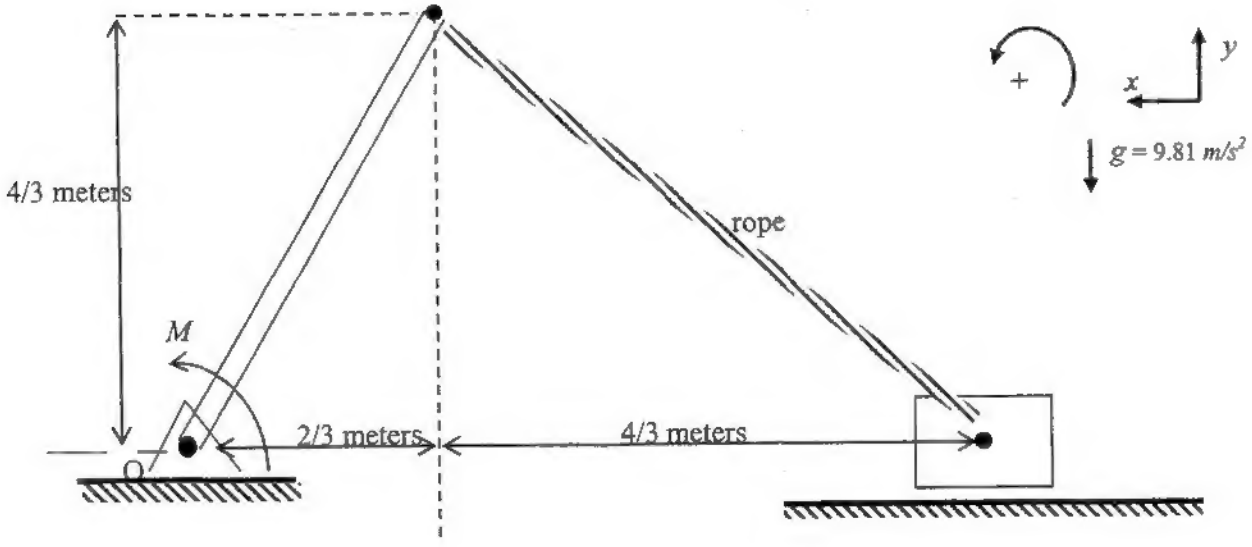

5. A long, slender uniform rod (solid body pendulum) is pinned at its end and is released from rest at the instant shown ($\theta = 0°$). After falling to the vertical position ($\theta = 90°$), the rod strikes the end of a slender, uniform stick that is lying at rest on a frictionless, horizontal table. The duration of impact between the rod and stick is 0.01 seconds and during this time the impact force, F, can be approximated as being constant. Immediately after impact, the stick on the table has an angular speed of 6 s^{-1}.

   (a) What is the angular velocity of the pendulum immediately before impact? **(4 marks)**

   (b) What is the magnitude of the impact force between the pendulum and stick? **(8 marks)**
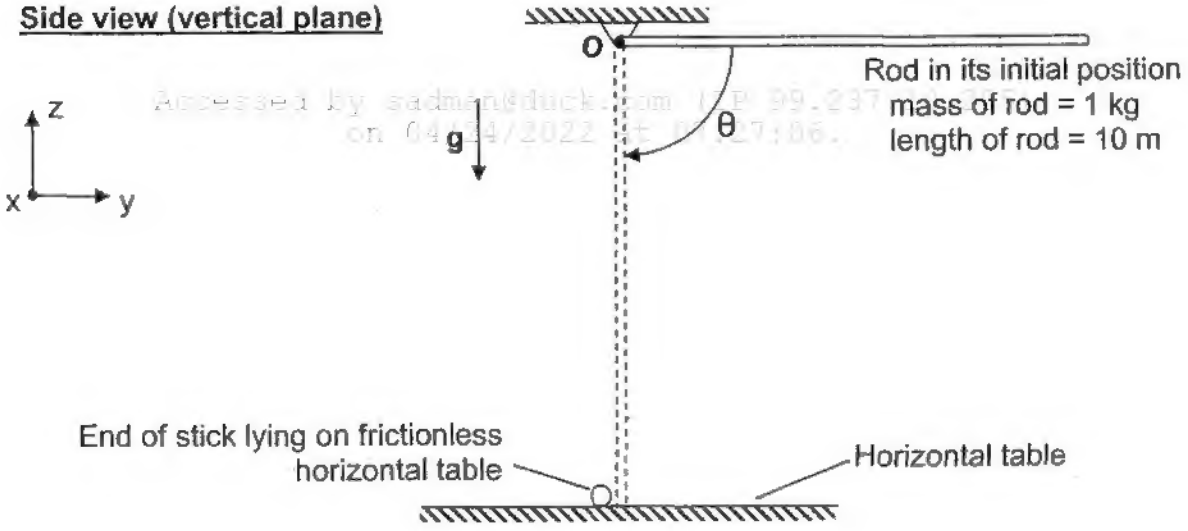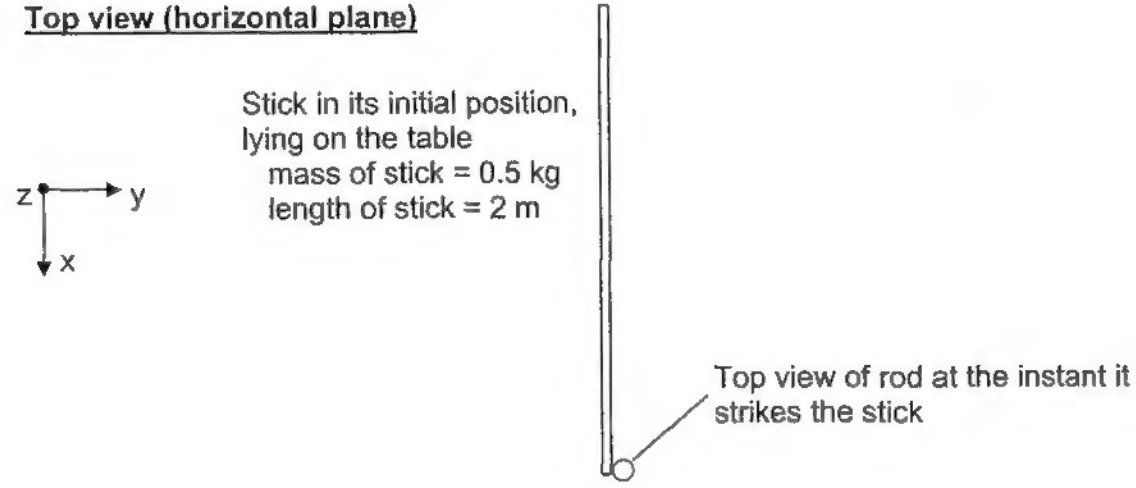
   (c) What is the angular velocity of the pendulum immediately after impact? **(8 marks)**